SPECIFICATIONS

1. 3" Plain end vents standard.
2. Max flow rate: 314 GPM
3. Max flow rate to achieve 5 ppm of residual light liquid in effluent: 45 GPM
4. Liquid capacity: 560 Gallons (74.6 cu. ft.)
5. Oil capacity: 285 Gallons
6. Solids/sediment capacity: 81 Gallons
7. Unit weight: 1125 lbs.
8. H20 rated cast iron covers.
9. Maximum operating temperature 140°F continuous.
10. For buried applications only.
11. Slick Stick™ Oil Level Monitoring System (see page 2).

ENGINEER SPECIFICATION GUIDE

Striem Oil Tanker™ model OT-500-SS-CS3 shall be lifetime guaranteed and made in USA of High Density Polyethylene. Separator shall be furnished for below grade installation with field adjustable riser system. Separator flow rate shall be 314 GPM. Separator oil capacity shall be 285 gallons. Sand capacity shall be 81 gallons. Separator shall be certified to IAPMO IGC 183-2016.

Clean Sweep™ polypropylene coalescing media has been third party tested to performance standard CEN EN858-1 for class 1 coalescing separators.

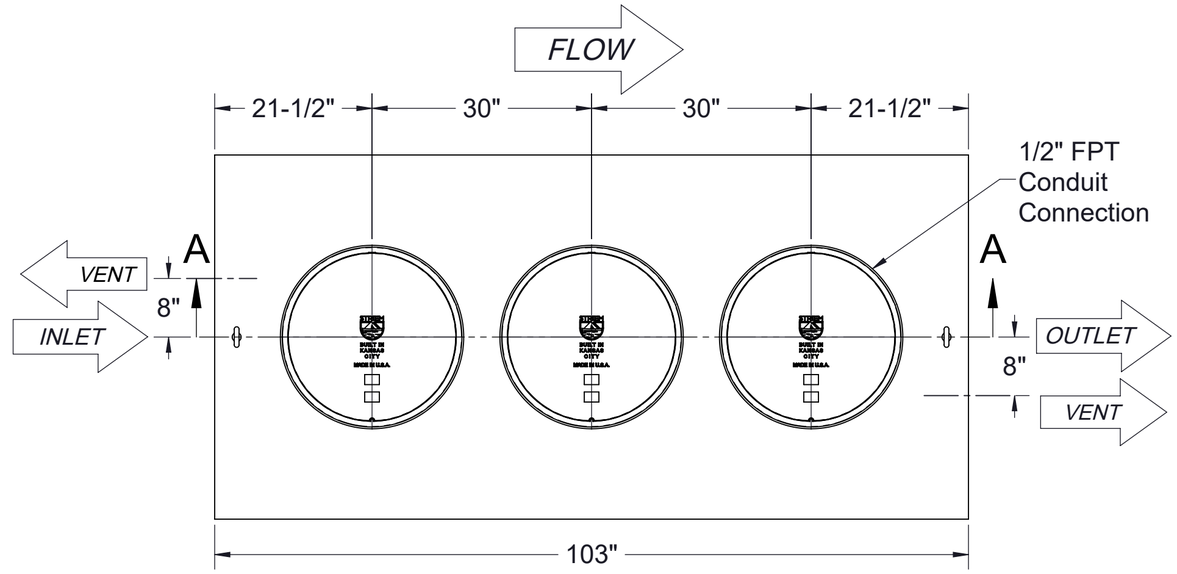

TOP VIEW

Directions: Choose connections, select options, sign and submit with purchase order.

Connections

Inlet / Outlet	Size
☐ Plain End	☐ 4"
☐ Male Thread	☐ 6"
	☐ 8" (Plain End Only)

Riser Options

- **Included** : 0" - 2"
- ☐ **SR24** (3) : >2" - 21"
- ☐ **LR24** (3) : >21" - 36"
- ☐ **SR24** (6) : >36" - 40"
- ☐ **SR24** (3) + **LR24** (3) : >40" - 55"
- ☐ **LR24** (6) : >55" - 69"
- ☐ **SR24** (3) + **LR24** (6) : >69" - 87"
- ☐ **LR24** (9) : >87" - 103"

Additional Options

- ☐ **HDK-500** : High Water Table Hold Down Kit

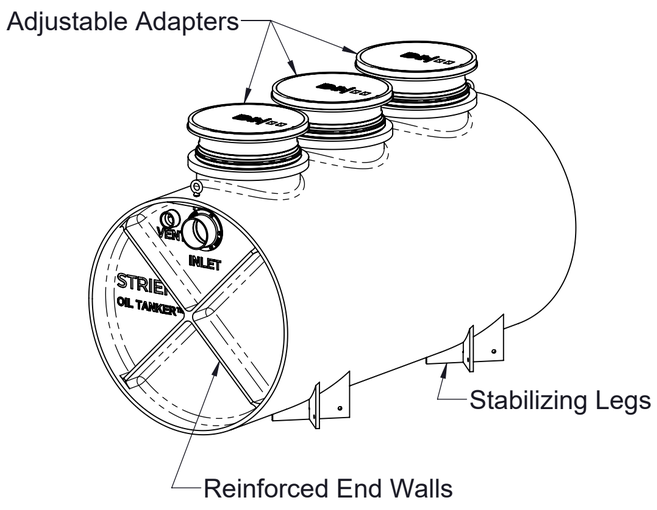

ISOMETRIC VIEW

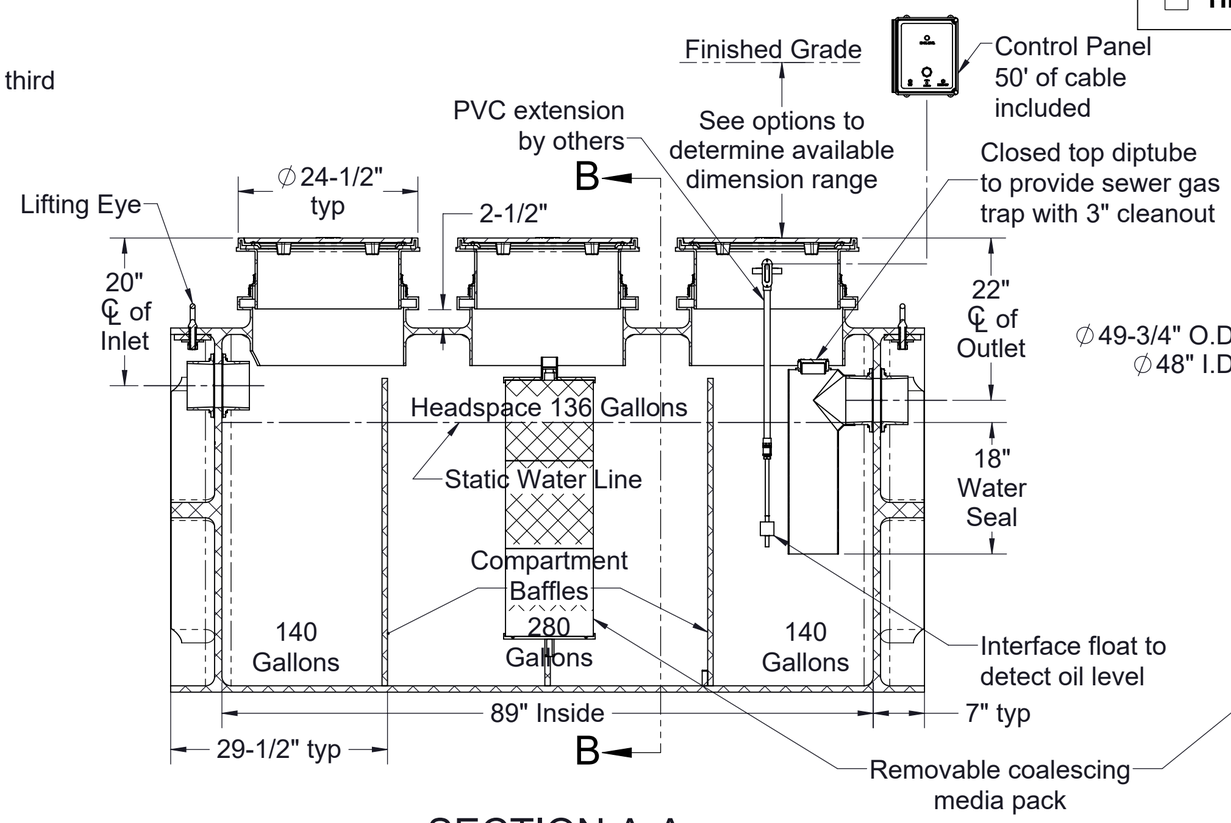

SECTION A-A

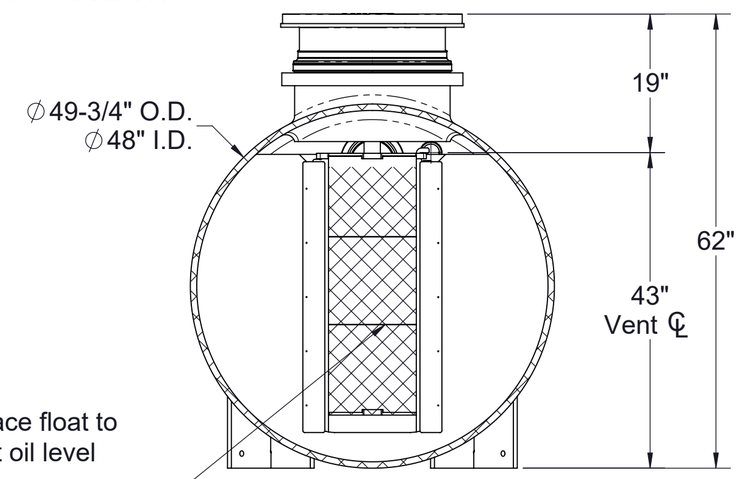

SECTION B-B

Signature of Approval: _____

Company: _____

Date of Approval: _____

Specifying Engineer: _____

Engineering Firm: _____

PO IS NON-CANCELABLE ORDER IS NON-RETURNABLE

UPC ®

PROPRIETARY AND CONFIDENTIAL

THE INFORMATION CONTAINED IN THIS DRAWING IS THE SOLE PROPERTY OF **STRIEM, LLC.** ANY REPRODUCTION IN PART OR AS A WHOLE WITHOUT THE WRITTEN PERMISSION OF **STRIEM, LLC.** IS PROHIBITED.

MODEL NUMBER: OT-500-SS-CS3

DESCRIPTION:
OIL TANKER™
POLYETHYLENE OIL SEPARATOR WITH
CLEAN SWEEP™ COALESCING MEDIA AND
SLICK STICK™ OIL LEVEL MONITORING SYSTEM
560 GALLON CAPACITY

DWG BY: MJ	DATE: 01/28/2022	REV: 0	ECO:

SPECIFICATION SHEET

Striem
3100 Brinkerhoff
Kansas City, KS 66115
Tel: 913-222-1500
orders@striemco.com
www.striemco.com

Made in the U.S.A

STRIEM

SPECIFICATIONS

1. UL Listed
2. Provides warning of high oil level conditions with interface float.
3. Single phase, 120 volt, 60 hertz power required.
4. NEMA 4X fiberglass, corrosion resistant, weatherproof enclosure suitable for outdoor use and damp environments.
5. Audible Alarm Buzzer, 95dB pulsing horn with no timeout.
6. High Oil Light, indicates oil has accumulated below the oil interface float or the tank liquid level is below the High Oil Interface Float.
7. Power On light inside enclosure. Visible from the outside. Green light indicates the power is on.
8. Horn off button that silences the audible alarm when pressed.
9. Test button that when pressed will test the system electronics.
10. Locking clasp on door.
11. Alarm bell stays on until reset. Light stays on until reset, even if level goes down.
12. Unit comes supplied with extra dry contact for connection to a building alarm system.

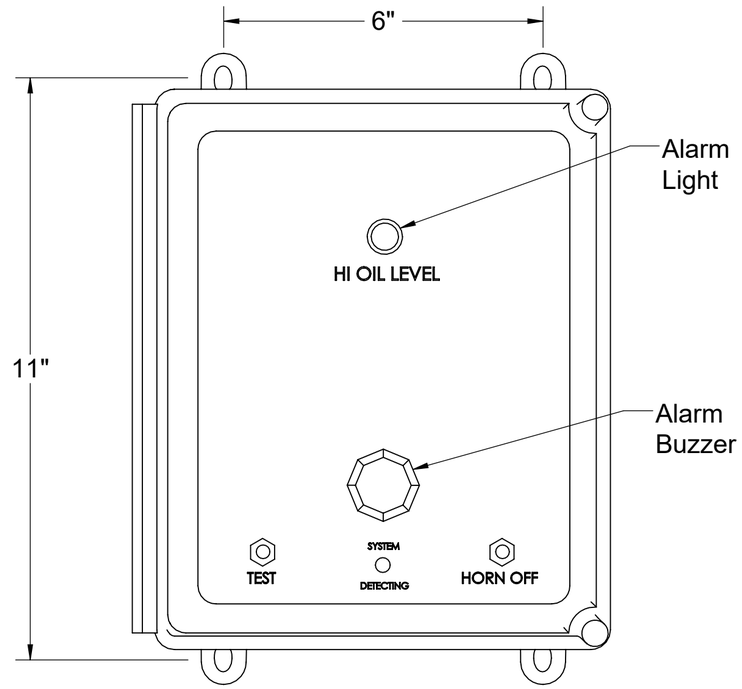

FRONT VIEW

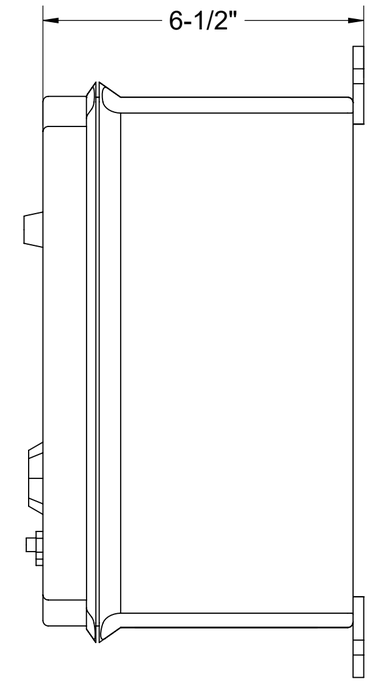

LEFT VIEW

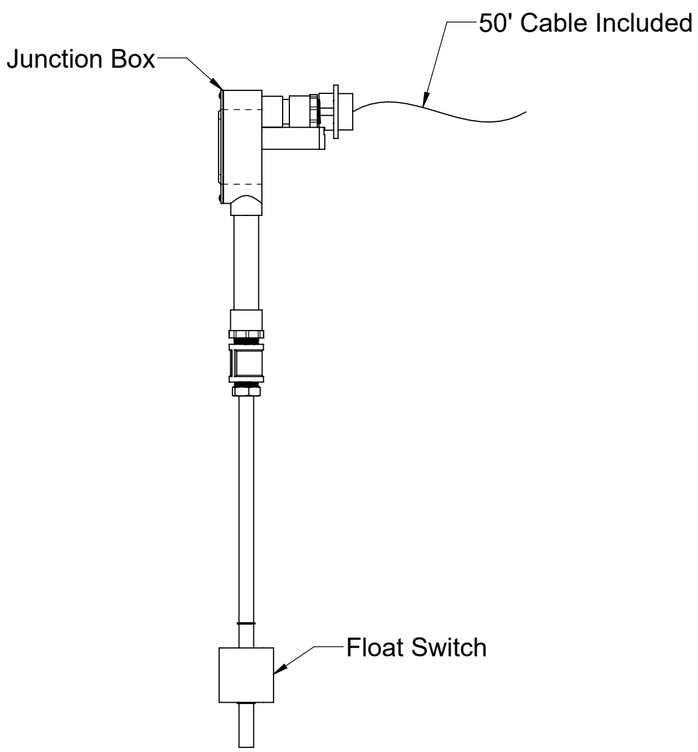

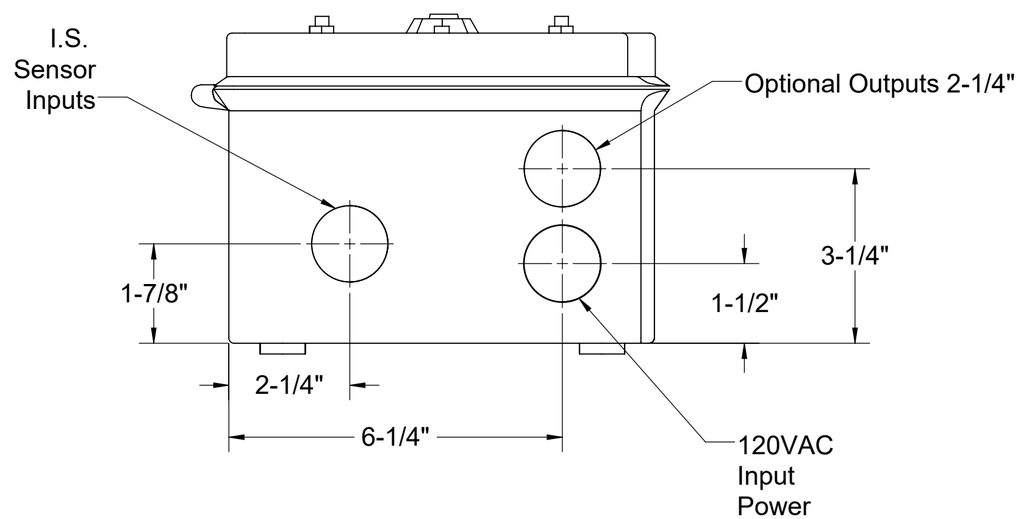

BOTTOM VIEW

MODEL NUMBER: 8056-001-01			**SPECIFICATION SHEET**
DESCRIPTION: SLICK STICK™ OIL LEVEL MONITORING SYSTEM FOR OS, OT, AND FLI SERIES			**Striem** 3100 Brinkerhoff Kansas City, KS 66115 Tel: 913-222-1500 orders@striemco.com www.striemco.com Made in the U.S.A
DWG BY: MJ	**DATE:** 01/14/2022	**REV:** 03	**ECO:**

PROPRIETARY AND CONFIDENTIAL

THE INFORMATION CONTAINED IN THIS DRAWING IS THE SOLE PROPERTY OF **STRIEM, LLC.** ANY REPRODUCTION IN PART OR AS A WHOLE WITHOUT THE WRITTEN PERMISSION OF **STRIEM, LLC.** IS PROHIBITED.

Installation Guidelines:

1. The Slick Stick™ interface float and alarm panel will ship separately from the tank.
2. Install the 1/2" FPT brass coupling to the end of the Slick Stick™ interface float. Thread the 1/2" MPT x socket PVC fitting into the 1/2" FPT brass coupling.
3. If the tank is to be installed above grade, or without any adjustment to the adapter, install a length of 1/2" sch. 40 PVC pipe between the bottom of the junction box and the top of the 1/2" MPT x socket PVC fitting. Choose the length from Table 1 that corresponds with the unit, and oil capacity to be monitored.
4. If the tank is buried, and the adapter will be adjusted upward and/or risers will be used, add the total upward extension dimension to the length determined from Table 1 to determine total length of 1/2" PVC pipe length. For example, assume an OS-75 is being installed below grade and requires 26" of riser extension. Assume you want the control panel to alarm when the oil capacity reaches 70% of the total oil capacity. The length of the 1/2" PVC pipe extension should be 26" (riser depth) + 10" (from Table 1) = 36".
5. Run interface float wiring through 1/2" PVC pipe and into the bottom of the juntion box inside the adapter. Connect wiring to alarm panel (see wire diagram).
6. Once power is applied, the alarm will sound. Fill the tank to the active water line to silence the alarm.

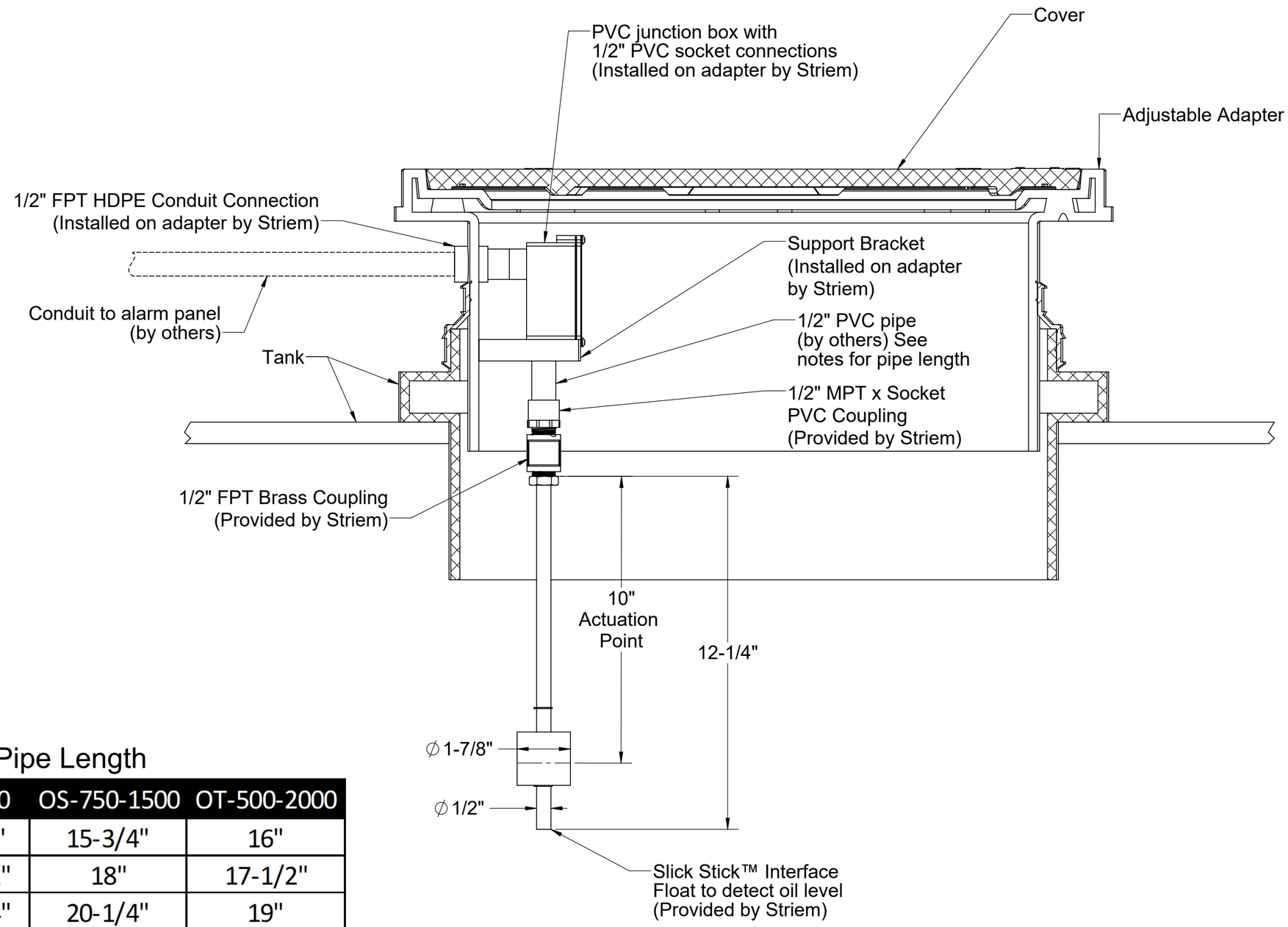

Table 1: 1/2" PVC Pipe Length

Oil Capacity	OS-50	OS-75	OS-100	OS-750-1500	OT-500-2000
50%	1-1/2"	6-5/8"	9-5/8"	15-3/4"	16"
60%	2-3/8"	8-1/4"	11-1/2"	18"	17-1/2"
70%	3-3/8"	10"	13-1/4"	20-1/4"	19"
80%	4-3/8"	12"	15"	22-1/2"	20-1/2"
90%	5-1/2"	13-7/8"	18-3/4"	24-1/2"	22"

PROPRIETARY AND CONFIDENTIAL

THE INFORMATION CONTAINED IN THIS DRAWING IS THE SOLE PROPERTY OF **STRIEM, LLC.** ANY REPRODUCTION IN PART OR AS A WHOLE WITHOUT THE WRITTEN PERMISSION OF **STRIEM, LLC.** IS PROHIBITED.

DESCRIPTION:

SLICK STICK™
INTERFACE FLOAT
INSTALLATION GUIDELINES

DWG BY: MJ | **DATE:** 01/14/2022 | **REV:** 04 | **ECO:**

Striem
3100 Brinkerhoff
Kansas City, KS 66115
Tel: 913-222-1500
orders@striemco.com
www.striemco.com

Made in the U.S.A