EXCAVATION

1. Surrounding soil must be undisturbed soil or well compacted engineering fill.
2. Measure the width and length of the tank and excavate a hole that is a minimum of 18" greater than the tank on all sides.
3. Depth of excavation shall be 12" deeper than tank bottom.
4. After the excavation is complete create a well compacted support layer of aggregate mixture so that ground supporting tank is a minimum of 12" above native soil. Aggregate mixture must be 3/4" size clean rock or sand, with no fines. For compaction, use a flat plate compactor to tamper rock or sand evenly for 15 minutes.

UNIT INSTALLATION

1. Lower and center the unit into hole using Striem lifting lug kit (included). Do not use chains or accessways to move the unit.
2. Ensure tops of risers are level with finished grade.
3. Fill unit with water before backfilling to stabilize unit, check for leaks, and prevent float out during backfilling.

BACKFILLING & FINISHED CONCRETE SLAB

1. Before backfilling and pouring of slab secure covers and risers (if necessary) to the unit.
2. Backfill evenly all around tank using crushed aggregate material approximately 3/4" size rock, or sand, with no fines.
3. When backfilling ensure backfill is worked under the unit using a probe to ensure the unit is fully supported.
4. Place 6" aggregate base under slab. Aggregate should be 3/4" size rock, or sand, with no fines.
5. H20 rated slab required.
6. Concrete to be 28 day compressive strength to 4000 PSI with 6±1% air entrainment.
7. NO. 4 rebar (∅ 1/2") grade 60 steel per ASTM A615: connected with tie wire.
8. Rebar to be 2 1/2" from edge of concrete.
9. Rebar spacing 12" grid. 4" spacing around access openings.

DEADMAN ANCHORING

1. Deadmen should be constructed as noted on Excavation and Backfill detail.
2. Deadmen should be 12" wide x 12" tall and equal to the length of the entire unit.
3. Each deadman should have 2 anchor points that each connect to a 3,500 lbs. rated turnbuckle.
4. Lay the deadmen parallel with the unit and ensure that it is outside the shadow of the tank.
5. Nylon straps rated to 3,333 lbs. each should be connected to a turnbuckle on each side. Turnbuckles should be secured to the deadmen anchor points on each side of the tank such that the tank is held down.

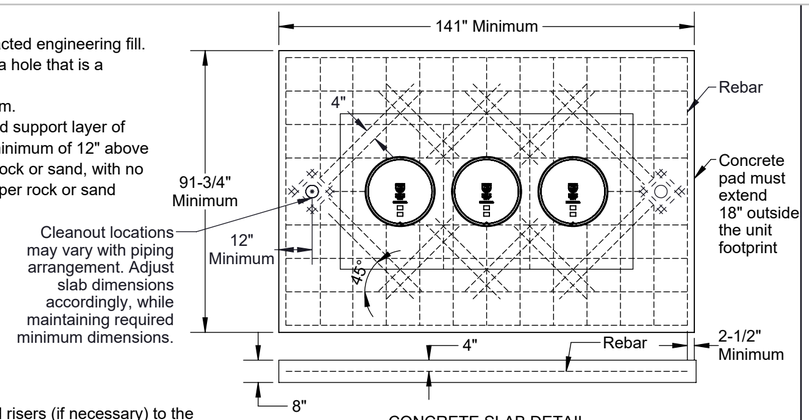

CONCRETE SLAB DETAIL

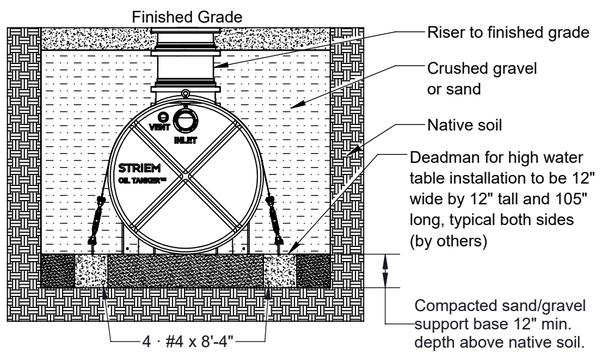

EXCAVATION AND BACKFILL DATA

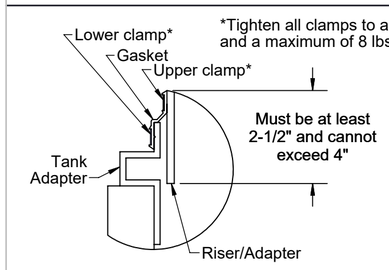

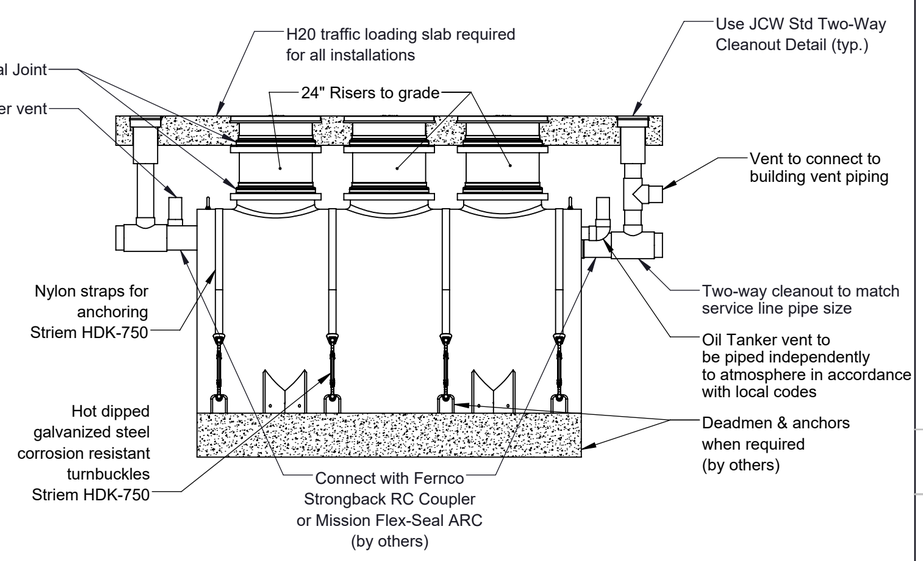

!!! ALL JCW INSPECTIONS SHALL BE REQUESTED ONLINE THROUGH THE WWW.MYGOVERNMENTONLINE.ORG PORTAL !!!

!!! REFER TO JCW PERMIT FOR JCW INSPECTION REQUIREMENTS!!!

Sand/Oil Separator Leak Test Inspection
- The separator leak test shall be performed after the H20 slab rebar configuration has been inspected.
- Step 1: All pipes entering/exiting the separator shall be plugged.
- Step 2: The separator shall be filled to finish grade at the top of the riser with water.
- Step 3: The water level shall be marked by JCW and monitored for 30 minutes to confirm the separator is not leaking.

ALL PIPE EMBEDMENT IN ACCORDANCE WITH JCW STANDARDS

PROPRIETARY AND CONFIDENTIAL

THE INFORMATION CONTAINED IN THIS DRAWING IS THE SOLE PROPERTY OF **STRIEM, LLC.** ANY REPRODUCTION IN PART OR AS A WHOLE WITHOUT THE WRITTEN PERMISSION OF **STRIEM, LLC.** IS PROHIBITED. JCW IS ALLOWED PUBLICATION & DISTRIBUTION

SPECIFICATIONS

1. Max flow rate: 314 GPM.
2. Liquid capacity: 750 Gallons (100.3 cu. ft.).
3. Oil capacity: 323 Gallons.
4. Solids/sediment capacity: 295 Gallons.
5. Unit weight w/std. covers: 1253 lbs.
6. H20 rated pickable cast iron covers.
7. Maximum operating temperature 140°F continuous.

NOTES

1. 7/8" thick high density polyethylene walls.
2. Unit supplied with built-in adapter(s) for up to 5" of adjustability. Additional riser(s) available for deeper burial depth.
3. For buried applications.
4. Lifting lug set included for easy install.

ENGINEER SPECIFICATION GUIDE

Striem oil separator model OT-750-JCW shall be lifetime guaranteed and made in USA of High Density Polyethylene with minimum 7/8" uniform wall thickness. Separator shall be furnished for below grade installation with field adjustable riser system. Separator flow rate shall be 314 GPM. Separator oil capacity shall be 323 gallons. Sand capacity shall be 295 gallons. Separator shall be certified to IAPMO IGC 183-2016. Pickable cast iron cover shall provide water/gas-tight seal and be H20 traffic rated.

PE STAMP
(For H20 Slab Design Only)

Hold Down Kit Required Unless Sealed by Kansas Professional Engineer

Additional Options

☐ **HDK-750** - High Water Hold Down Kit
☐ **SS** - Slick Stick™ Oil Level Monitoring System*

*Monitoring system will raise covers by 3".

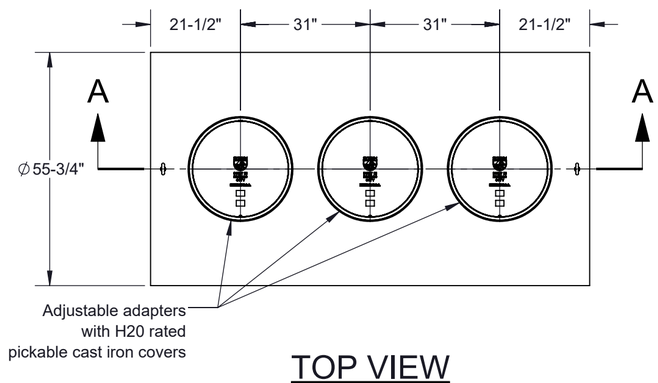

TOP VIEW

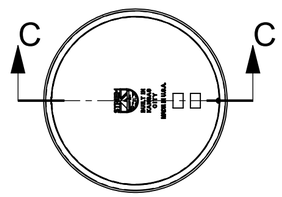

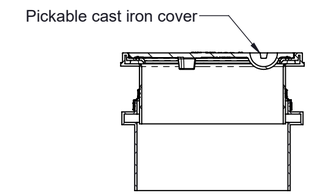

SECTION C-C

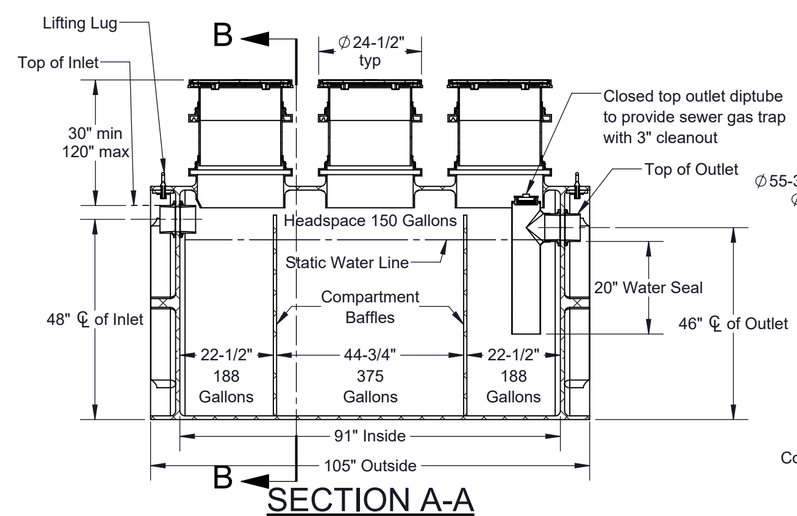

SECTION A-A

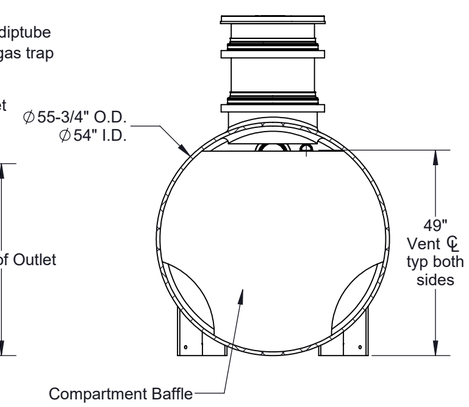

SECTION B-B

MODEL NUMBER: OT-750-JCW

SPECIFICATION SHEET

DESCRIPTION:

POLYETHYLENE OIL SEPARATOR
314 GPM
750 GALLON CAPACITY
JOHNSON COUNTY WASTEWATER DETAIL

DWG BY: WLF | **DATE:** 12/17/21 | **REV:** 0

Striem
3100 Brinkerhoff
Kansas City, KS 66115
Tel: 913-222-1500
orders@striemco.com
www.striemco.com

Made in the U.S.A