SPECIFICATIONS

1. 4" Plain End inlet/outlet, 2" Plain End vents, H20 traffic-rated cast iron covers standard.
2. Liquid holding capacity: 250 Gallons.
3. Unit weight w/ standard covers: 345 lbs.
4. Maximum operating temperature 140˚F continuous.

NOTES

1. For gravity drainage applications only.
2. Do not use for pressure applications.
3. Capped auxiliary vent provided to allow flexibility with vent piping and design. Provided cap can be moved to unused vent location, or discarded if two chamber vents are required per local code.
4. Cover placement allows full access to tank for proper maintenance.
5. Diptube is removable to inspect/clean piping.
6. Maximum burial depth: 90" from standard cover height.

ENGINEER SPECIFICATION GUIDE

Striem neutralization tank model LB-275 shall be lifetime guaranteed and made in the USA. Tank shall be constructed of polyethylene. Tank shall be manufactured for above- or below-grade installation. Field-adjustable riser system is available as an option to bring manhole covers to grade. Tank liquid holding capacity shall be 250 gallons. Covers shall be H20 traffic-rated pickable cast iron.

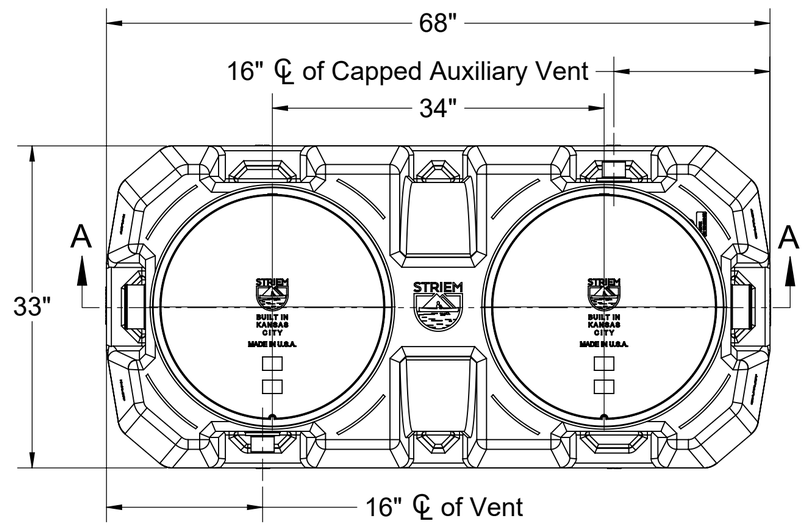

TOP VIEW

OPTIONS

Connection Options (Plain End Only)

Inlet / Outlet

- ☐ 4"
- ☐ 6"

Riser Options

From Factory: Up to 5"

- ☐ Up to 24": **SR24** (2)
- ☐ Up to 39": **LR24** (2)
- ☐ Up to 43": **SR24** (4)
- ☐ Up to 58": **SR24** (2) + **LR24** (2)
- ☐ Up to 72": **LR24** (4)
- ☐ Up to 90": **SR24** (2) + **LR24** (4)

- OR -

- ☐ **CPRK** (2): 11" - 90" (See specification for more detail.)

Additional Options

- ☐ **C24-M** (2): 2,000 lbs. Rated Bolted Composite Covers
- ☐ **HDK-2:** High Water Table Hold Down Kit
- ☐ **CC-1 & SPK:** Command Center pH Monitoring Package with Sensor Placement Kit
- ☐ **Limestone:** 90%+ Calcium Carbonate (3,150 lbs.)

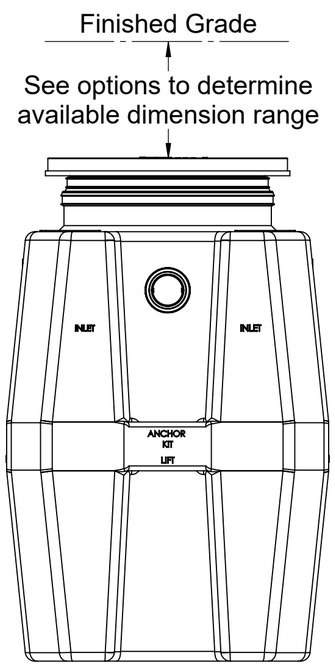

END VIEW

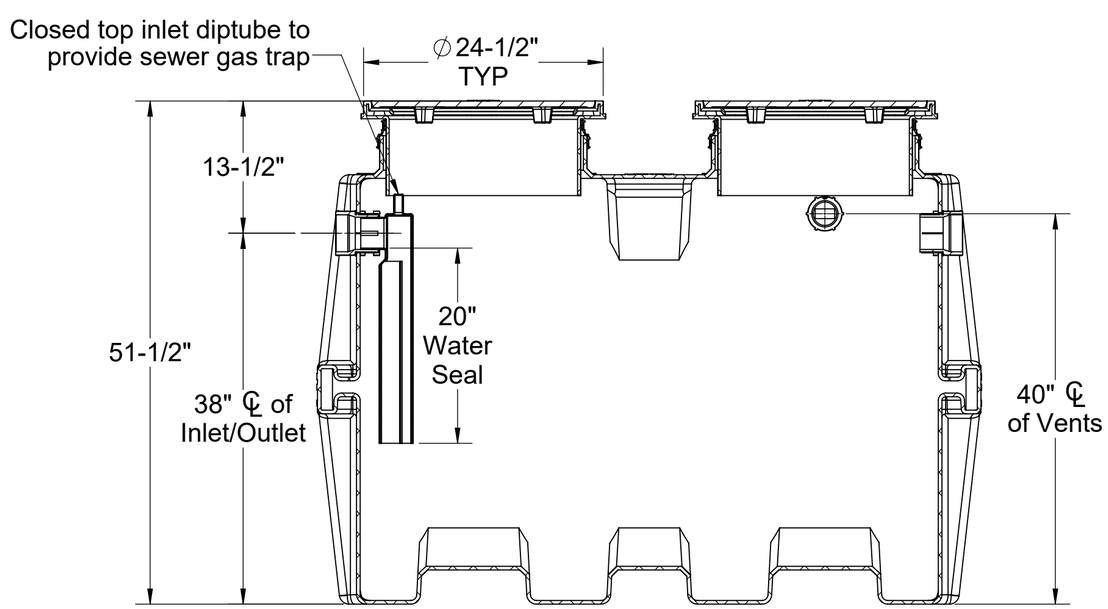

SECTION A-A

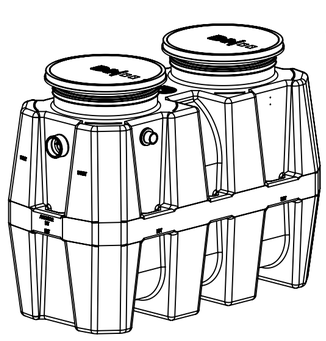

PROPRIETARY AND CONFIDENTIAL
THE INFORMATION CONTAINED IN THIS DRAWING IS THE SOLE PROPERTY OF **STRIEM, LLC.**
ANY REPRODUCTION IN PART OR AS A WHOLE WITHOUT THE WRITTEN PERMISSION OF **STRIEM, LLC.** IS PROHIBITED.

MODEL NUMBER:	LB-275		
DESCRIPTION:	LAB BASIN™ POLYETHYLENE NEUTRALIZATION TANK		
DWG BY: ENG	**DATE:** 2/23/2026	**REV:** 2	

SPECIFICATION SHEET

Striem
Kansas City, KS
Tel: 913-222-1500
orders@striemco.com
www.striemco.com

Made in the U.S.A

STRIEM