OCT-275

Oil Collection Tank

Installation, Operation, & Maintenance Guide

913-222-1500 HELP@STRIEMCO.COM STRIEMCO.COM

CUSTOMER SERVICE HOURS: 8 AM - 5 PM CST

2/13/26

STRIEM

OCT-275

Oil Collection Tank

Installation, Operation, & Maintenance Guide

OVERVIEW

Striem model OCT-275 is a 250 gallon polyethylene oil collection tank intended for above- or below-grade installation. It is designed to collect oil and other immiscible lighter-than-water contaminants from wastewater and keep them from entering the sewage system.

OPERATION

Oil or other immiscible, lighter than water liquid waste enters through the inlet connection where it is safely stored for later pump out.

LIFETIME WARRANTY

Our products are designed to last the lifetime of the plumbing system in which they are installed. If they don't, we will repair or replace them at no charge. Product damage due to normal wear and tear may be repaired or replaced at a reasonable charge. See website for full details. FAILURE TO INSTALL IN ACCORDANCE WITH THE INSTALLATION, OPERATION, AND MAINTENANCE GUIDE WILL VOID YOUR WARRANTY.

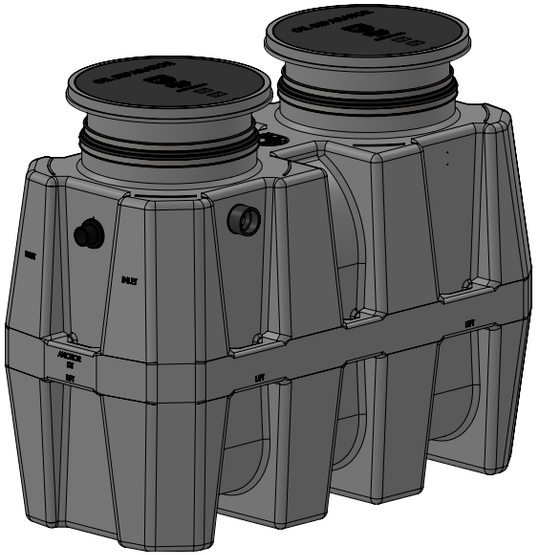

OCT-275
250 GAL
OIL COLLECTION TANK

LIFETIME GUARANTEED

WARNING: FAILURE TO INSTALL IN ACCORDANCE WITH THE INSTALLATION, OPERATION, AND MAINTENANCE GUIDE WILL VOID YOUR WARRANTY.

MADE IN THE USA
* BUILT in * KANSAS CITY

WARNING

DO NOT AIR PRESSURE TEST UNIT!
DOING SO MAY RESULT IN PROPERTY DAMAGE, SERIOUS BODILY INJURY, OR DEATH!
Refer to Installation Instructions for correct testing procedure.

LEAK/SEAL TESTING

Do not air test unit or Teleglide Riser system! Doing so may result in property damage, personal injury or death.

To perform a leak/seal test on the base unit, cap/plug all plumbing connections, remove the cover, and fill the unit with water just above the highest connection. Inspect unit and connections for leaks. Check water level at specific time intervals per local code.

WARNING: FAILURE TO INSTALL IN ACCORDANCE WITH THE INSTALLATION, OPERATION, AND MAINTENANCE GUIDE WILL VOID YOUR WARRANTY.

MAINTENANCE

1. Always take proper care to ensure a safe and healthy environment while maintaining the oil collection tank. Avoid the presence of sparks or open flames while maintaining the unit.
2. Remove cover.
3. Contact a professional pumper contractor to remove all contents of the oil collection tank.
4. Clean the drain lines thoroughly of all debris.
5. Inspect cover gasket for wear and tear and replace cover.
6. Dispose of contents per local code.

PUMPING FREQUENCY

OCT-275 must be maintaned prior to reaching maximum oil capacity.

Pumping frequency depends on the amount of oil collected over time. Monitor oil levels to determine site specific maintenance schedule requirements.

Oil levels can be tested with a core sampler. Striem recommends a minimum pumping frequency of 6 months.

TROUBLESHOOTING TIPS

Slower than usual drainage may indicate a blockage and a need to maintain the oil collection tank. Ensure the drain lines are cleared of all debris in the presence of slow drainage.

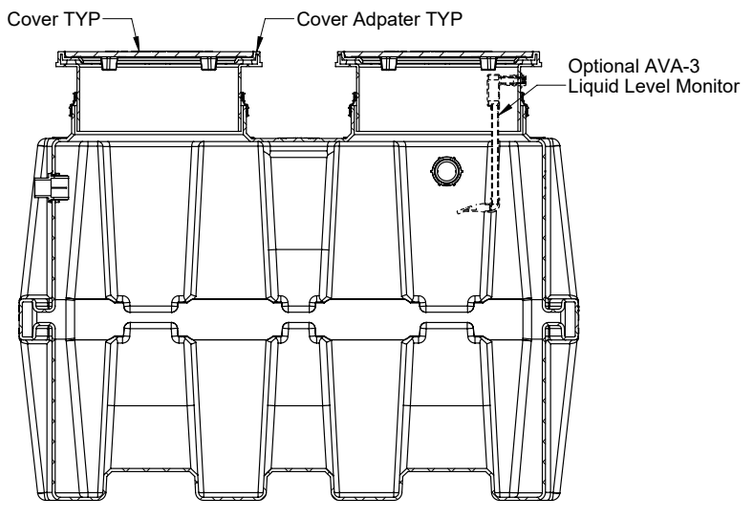

BELOW GRADE INSTALLATION INSTRUCTIONS

EXCAVATION

1. Surrounding soil must be undisturbed native soil or well compacted engineering fill.
2. Width and length of excavation shall be minimum 12" greater than the tank on all sides.
3. Depth of excavation shall be 6" deeper than tank bottom.
4. Hold Down Kit is recommended for installations in high water table conditions to prevent float out. To be determined by specifying engineer. If necessary, order optional "High Water Table Hold Down Kit (HDK-2)".

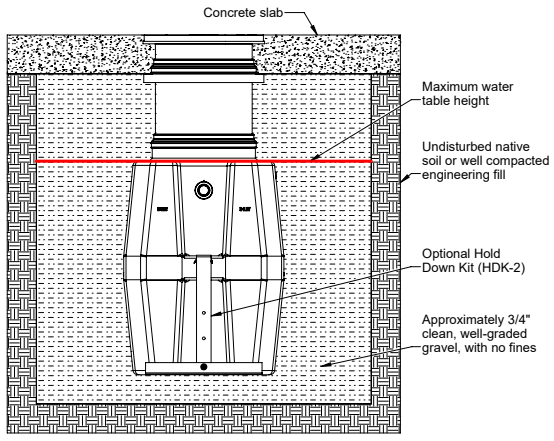

HOLD DOWN KIT INSTALLATION STEPS

1. Slide Anchor Strap over tie down point on end wall.
2. Bolt Anchor Strap to Anchor Plate using provided hardware.
3. Hold down force achieved by backfill weight acting on Anchor Plate.
4. Anchor Plate may be bolted to concrete slab, if required, by using holes provided in Anchor Plate.

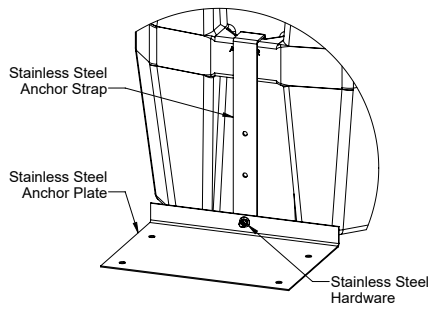

ABOVE GRADE INSTALLATION INSTRUCTIONS

UNIT INSTALLATION

1. Connect waste piping to unit.
2. Ensure covers are properly installed.
3. Striem recommends our C24-M pedestrian cover for above-grade installations.

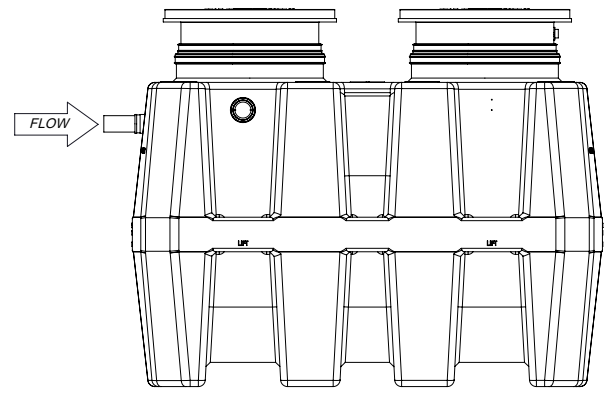

UNIT INSTALLATION

1. Lower and center the unit into the excavated hole. Do not use chains or accessways to move the unit.
2. The water table height must not exceed the height of the tank body. The tank and risers are not intended to withstand groundwater levels above the height of the tank body. Exposure to high groundwater levels may compromise the structural integrity of the tank and risers.
3. Ensure the unit covers are level with finished grade.
4. Maximum burial depth: 90" from standard cover height, 87" from cover with monitoring.

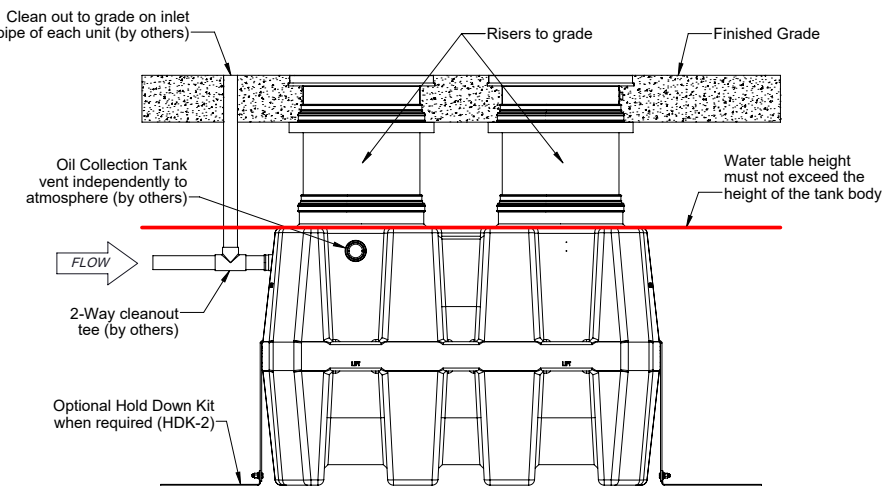

BACKFILLING & FINISHED CONCRETE SLAB

1. Preparation of sub grade per geotech recommendations.
2. Stabilize and compact sub grade to 95% proctor.
3. Before backfilling and pouring of slab, secure covers and risers (if used) to the unit.
4. Backfill using 3/4" clean, well-graded gravel, with no fines (AASHTO M43 #57 Stone or similar). **Native soil, sand, and CLSM (aka, slurry or flowable fill) are not acceptable backfill materials.**
5. Thickness of concrete slab around the covers to be 8" for traffic loading. Thickness of concrete slab around the covers to be 4" for pedestrian or greenspace areas.
6. Concrete slab cannot interfere with the tank body below the risers.
7. Concrete to be 28 day compressive strength to 4000 PSI with 6 ± 1% air entrainment.
8. NO. 4 rebar (1/2") grade 60 steel per ASTM A615: connected with tie wire.
9. Rebar to be 2-1/2" from edge of concrete.
10. Rebar spacing 12" grid. 4" spacing around access openings.

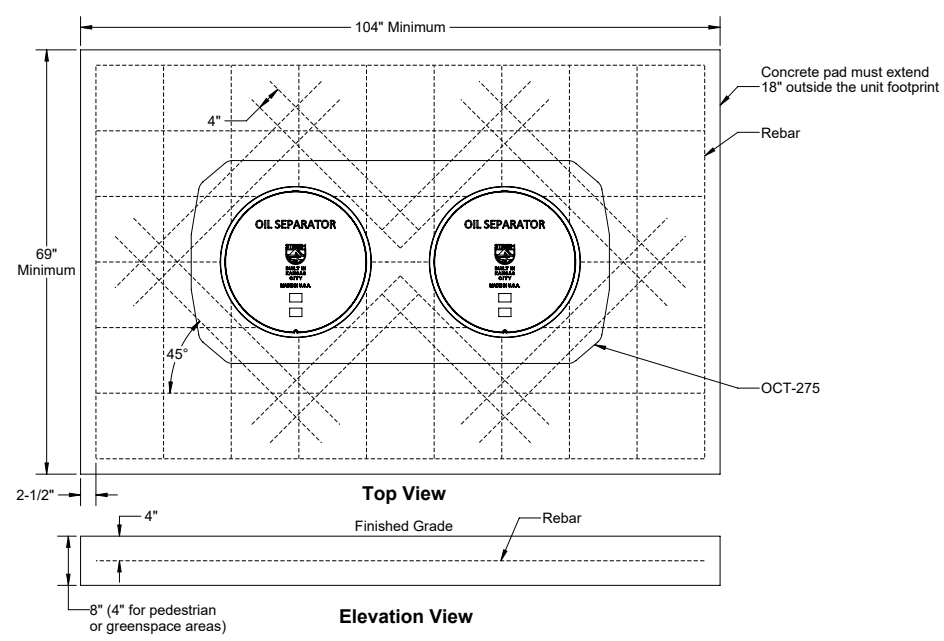

TELEGLIDE RISER | INSTALLATION INSTRUCTIONS

CORRUGATED PIPE RISER KIT (CPRK) AVAILABLE AS ALTERNATE RISER SOLUTION. SEE CPRK INSTALLATION INSTRUCTIONS FOR MORE DETAILS.

1
- Place OCT-275 so that the pipe connections line up with jobsite piping.
- Measure dimension X to determine riser height needed.
- Select the required risers from the adjacent table. Riser chart shows quantity for each tank manway.

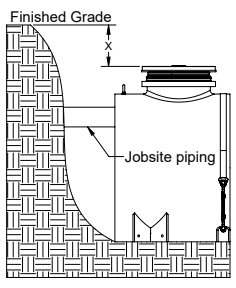

Cover Adapter		
X from Standard Cover Height	X from Cover with Monitoring	Risers Per Manway
Up to 5"	Up to 2"	Included
Up to 24"	Up to 21"	SR24
Up to 39"	Up to 36"	LR24
Up to 43"	Up to 40"	SR24 (x2)
Up to 58"	Up to 55"	SR24 + LR24
Up to 72"	Up to 69"	LR24 (x2)
Up to 90"	Up to 87"	SR24 (x2) + LR24 (x2)

2
- Loosen upper clamp with **nut driver bit (included with tank).**
- If no risers are needed, adjust cover adapter height as needed.
- Ensure 2-1/2" minimum engagement is maintained.
- If risers are needed, remove covers from cover adapters, and cover adapters from the unit.

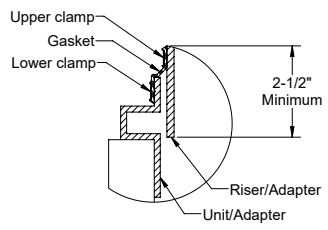

3
- Insert cover adapters into the required risers until they stop.
- Tighten upper clamp to keep risers from shifting. Risers are installed from short to long.
- If using a standard cover adapter, measure the riser height needed, X + 5.25" down the sidewall of the risers.
- If using a cover adapter with Slick Stick™, measure the riser height needed, X + 7.75" down the sidewall of the risers.
- Mark the location with **china marker (included with tank)**.
- Cover adapter may need to be adjusted outward for some dimension ranges. If mark is at the end of riser, no cutting is required.
- Corrugated Pipe Riser Kit (CPRK) available as alternate riser solution. See CPRK Installation Instructions for more details.

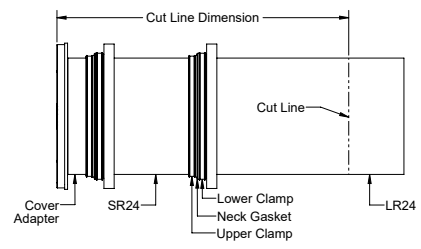

4
- Uninstall cover adapters and risers
- Extend mark made in **step 3** around the circumference of the riser.
- Cut along line with jigsaw, circular saw, or reciprocating saw.
- Make a mark around the circumference of the riser 3" from the cut end of riser.
- If no cuts were needed, make the mark 3" from the bottom of the bottom riser.

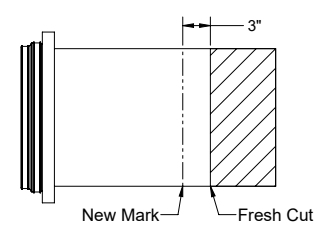

5
- Wipe clean all riser and cover adapter sidewalls.
- Insert the first riser into the tank neck until the mark made in **step 4** is in-line with the top of the neck gasket. This will ensure your risers reach the finished grade measured in **step 1**.

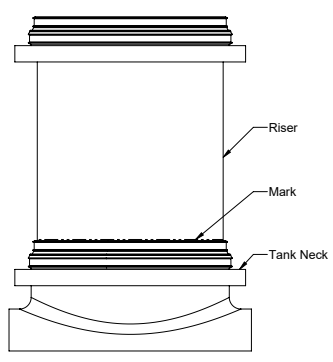

6
- Install risers and cover adapters into the tank neck starting from the marked riser, moving up to finished grade.
- Upper clamps may need to be loosened or removed to aid in assembly.

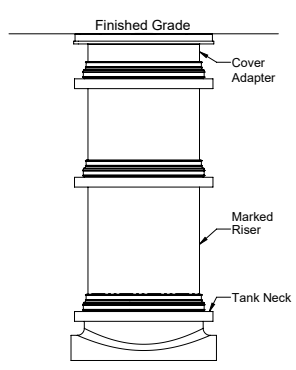

7
- Tighten all clamps. Striem recommends 57 in•lbs of torque.
- Reinstall covers on cover adapters.
- If tilting of the cover adapter is required to be flush with finished floor, it must be done after all clamps are tightened. A 6.5° tilt is the maximum.

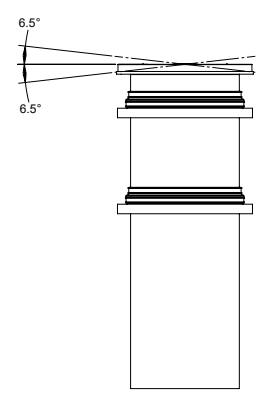
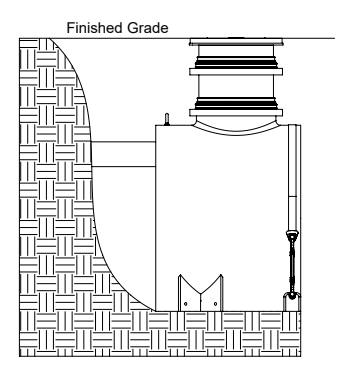
8
- If jobsite riser height conditions change after the previous steps have been completed, there is still room for vertical adjustment.
- As long as the minimum engagement of 2-1/2" on all joints are maintained, the adapters and risers may be adjusted/cut as many times as necessary.