SPECIFICATIONS

1. 2" Plain End inlet, 3" Plain End vents, H20 traffic-rated cast iron covers standard.
2. Oil capacity: 250 Gallons (33.4 cu ft).
3. Unit weight w/ standard covers: 340 lbs.
4. Maximum operating temperature: 140°F continuous.

NOTES

1. For gravity drainage applications only.
2. Do not use for pressure applications.
3. Capped auxiliary vent provided to allow flexibility with vent piping and design. Provided cap can be moved to unused vent location, or discarded if two chamber vents are required per local code.
4. Cover placement allows full access to tank for proper maintenance.
5. Maximum burial depth: 90" (87" w/ monitoring) from standard cover height.

ENGINEER SPECIFICATION GUIDE

Striem oil collection tank model OCT-275 shall be lifetime guaranteed and made in the USA. Tank shall be constructed of polyethylene. Tank shall be manufactured for above- or below-grade installation. Field-adjustable riser system is available as an option to bring manhole covers to grade. Tank oil collection capacity shall be 250 gallons. Covers shall be H20 traffic-rated pickable cast iron cover.

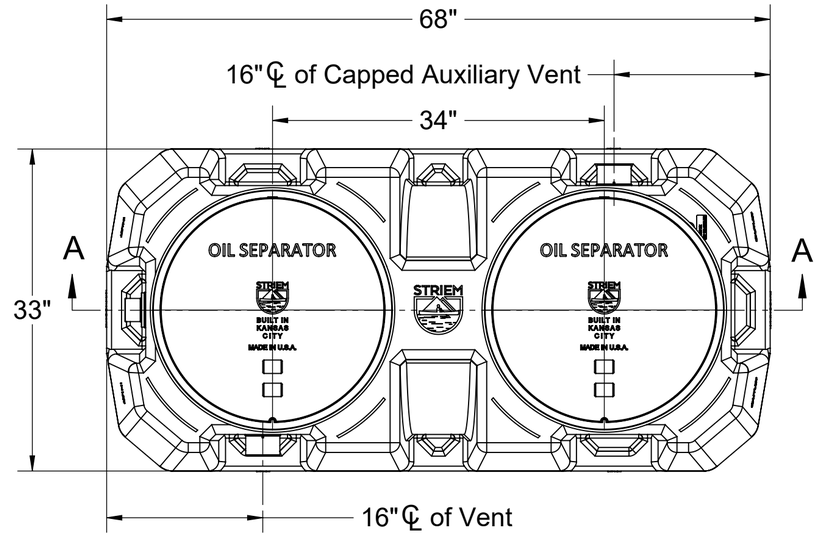

TOP VIEW

OPTIONS

Connection Options (Plain End Only)

Inlet

- ☐ 2"
- ☐ 3"
- ☐ 4"
- ☐ 6"

Riser Options

From Factory: Up to 5" (Up to 2" w/ monitoring)

- ☐ Up to 24" (21" w/ monitoring): **SR24** (2)
- ☐ Up to 39" (36" w/ monitoring): **LR24** (2)
- ☐ Up to 43" (40" w/ monitoring): **SR24** (4)
- ☐ Up to 58" (55" w/ monitoring): **SR24** (2) + **LR24** (2)
- ☐ Up to 72" (69" w/ monitoring): **LR24** (4)
- ☐ Up to 90" (87" w/ monitoring): **SR24** (2) + **LR24** (4)

- OR -

☐ **CPRK** (2)**:** 11" - 90" (11" - 87" w/ monitoring)
(See specification for more detail.)

Additional Options

- ☐ **HDK-2:** High Water Table Hold Down Kit
- ☐ **C24-M** (2)**:** 2,000 lbs. Rated Bolted Composite Covers
- ☐ **AVA-3:** Single-Level Monitoring Package
- ☐ **AVA-4:** Multi-Level Monitoring Package

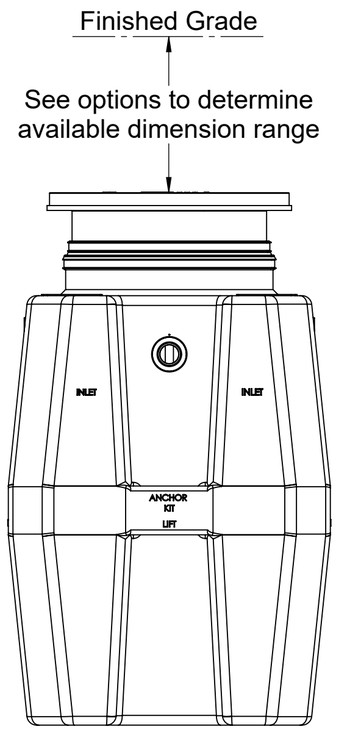

END VIEW

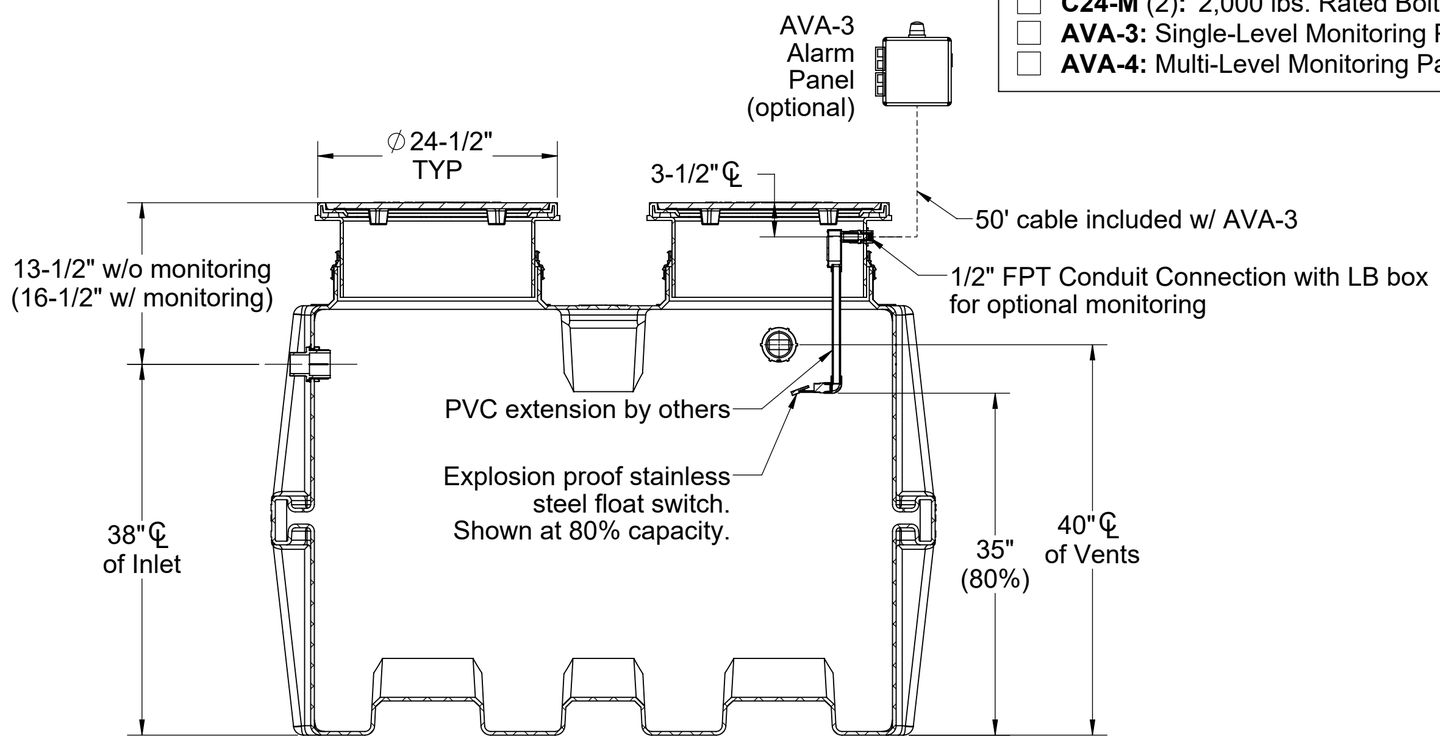

SECTION A-A

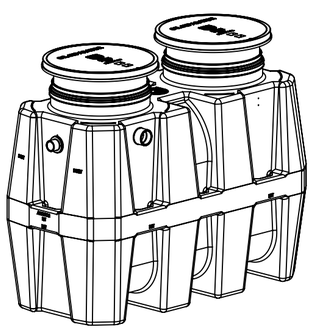

PO IS NON-CANCELABLE ORDER IS NON-RETURNABLE

PROPRIETARY AND CONFIDENTIAL
THE INFORMATION CONTAINED IN THIS DRAWING IS THE SOLE PROPERTY OF **STRIEM, LLC.**
ANY REPRODUCTION IN PART OR AS A WHOLE WITHOUT THE WRITTEN PERMISSION OF **STRIEM, LLC.** IS PROHIBITED.

MODEL NUMBER:	OCT-275		
DESCRIPTION:	250 GALLON POLYETHYLENE OIL COLLECTION TANK		
DWG BY: ENG	**DATE:** 3/3/2026	**REV:** 1	

SPECIFICATION SHEET

Striem
Kansas City, KS
Tel: 913-222-1500
orders@striemco.com
www.striemco.com

Made in the U.S.A

STRIEM