SPECIFICATIONS

1. 4" Plain End inlet/outlet, 3" Plain End vents, H20 traffic-rated cast iron covers standard.
2. Certified max flow rate: 100 GPM.
3. Liquid capacity: 350 Gallons (46.8 cu. ft.).
4. Oil capacity: 87.5 Gallons.
5. Solids capacity: 114 Gallons.
6. Unit weight w/ standard covers: 410 lbs.
7. Maximum operating temperature 140˚F continuous.
8. Slick Stick Oil Level Monitoring System (see page 2).

NOTES

1. Engineered inlet diffuser efficiently separates oil from water.
2. Capped auxiliary vent provided to allow flexibility with vent piping and design. Provided cap can be moved to unused vent location, or discarded if two chamber vents are required per local code.
3. For gravity drainage applications only.
4. Do not use for pressure applications.
5. Cover placement allows full access to tank for proper maintenance.
6. Maximum burial depth: 87" from standard cover height.

ENGINEER SPECIFICATION GUIDE

Striem high efficiency oil/water separator model OS-350-SS shall be lifetime guaranteed and made in the USA. Separator shall be certified to IAPMO IGC 325 and carry a UPC listing. Separator shall be constructed of polyethylene. Separator shall be manufactured for above- or below-grade installation. Field-adjustable riser system is available as an option to bring manhole covers to grade. Separator flow rate shall be 100 GPM. Separator liquid holding capacity shall be 350 gallons and oil capacity shall be 87.5 gallons. Solids capacity shall be 114 gallons. Covers shall be H20 traffic-rated pickable cast iron.

IAPMO IGC 325 CERTIFICATION

The OS-350-SS has been third-party certified by IAPMO to the IGC 325 standard. The OS-350-SS achieved an average 99% efficiency with 2.3 mg/L at 100 GPM up to the maximum oil capacity of 87.5 gallons. The structural design has been approved and stamped by a structural engineer for direct burial in accordance with Striem's installation instructions.

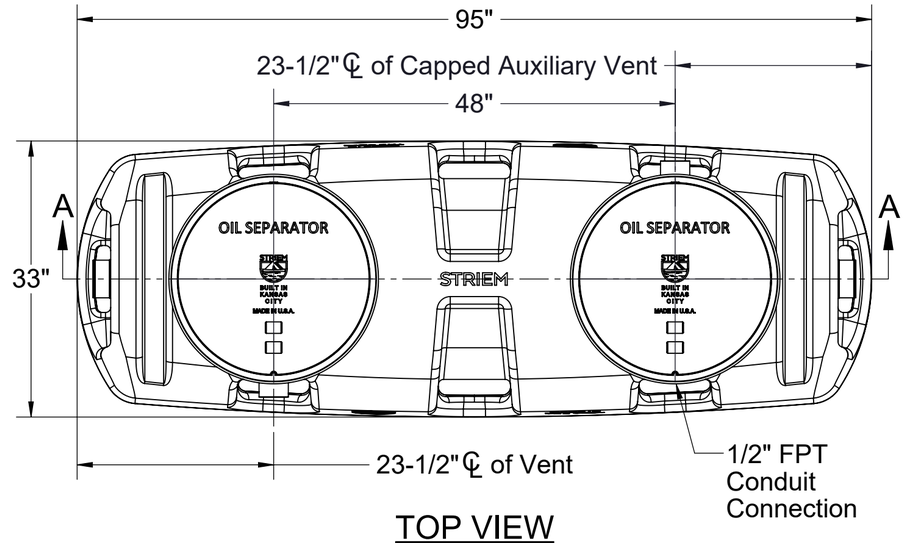

TOP VIEW

OPTIONS

Connection Options (Plain End Only)

Inlet / Outlet

- ☐ 4"
- ☐ 6"

Riser Options

From Factory: Up to 2"

- ☐ Up to 21"**: SR24** (2)
- ☐ Up to 36"**: LR24** (2)
- ☐ Up to 40"**: SR24** (4)
- ☐ Up to 55"**: SR24** (2) + **LR24** (2)
- ☐ Up to 69"**: LR24** (4)
- ☐ Up to 87"**: SR24** (2) + **LR24** (4)

-OR-

- ☐ **CPRK** (2)**:** 11" - 87" (See specification for more detail.)

Additional Options

High Water Table Hold Down Kits (Choose One)

- ☐ **HDK-11:** With Steel Plates Included
- ☐ **HDK-12:** For Concrete Deadmen (By Others)

☐ **C24-M** (2)**:** 2,000 lbs. Rated Bolted Composite Covers

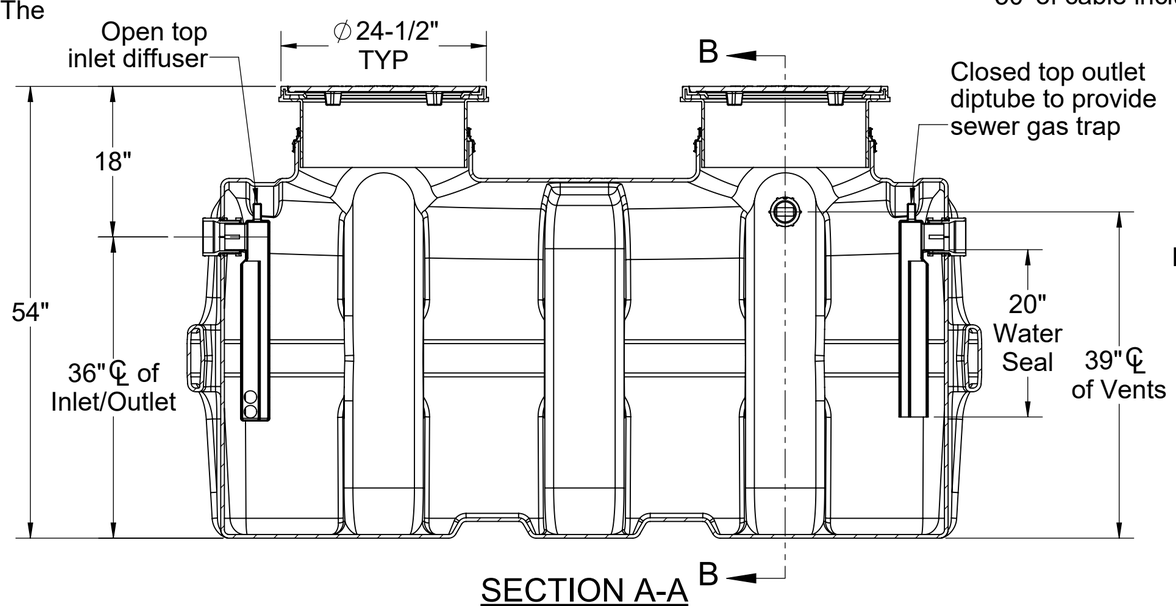

SECTION A-A

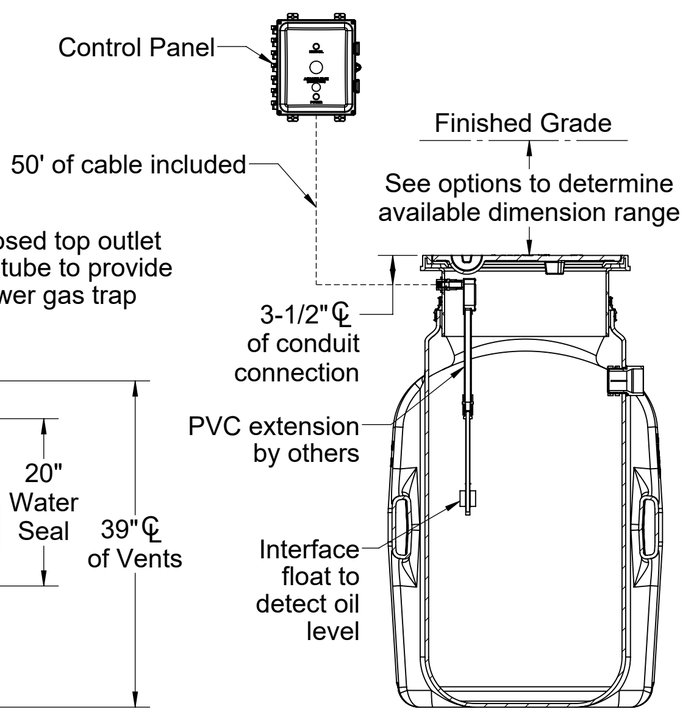

SECTION B-B

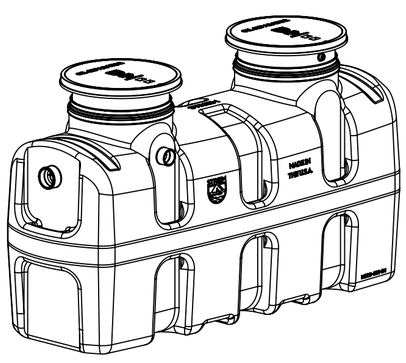

PO IS NON-CANCELABLE ORDER IS NON-RETURNABLE

PROPRIETARY AND CONFIDENTIAL
THE INFORMATION CONTAINED IN THIS DRAWING IS THE SOLE PROPERTY OF **STRIEM, LLC.**
ANY REPRODUCTION IN PART OR AS A WHOLE WITHOUT THE WRITTEN PERMISSION OF **STRIEM, LLC.** IS PROHIBITED.

MODEL NUMBER:	OS-350-SS		
DESCRIPTION:	100 GPM POLYETHYLENE HIGH EFFICIENCY OIL/WATER SEPARATOR WITH SLICK STICK™ OIL LEVEL MONITORING SYSTEM		
DWG BY: ENG	**DATE:** 3/3/2026	**REV:** 0	

SPECIFICATION SHEET

Striem
Kansas City, KS
Tel: 913-222-1500
orders@striemco.com
www.striemco.com

Made in the U.S.A

STRIEM

SPECIFICATIONS

1. UL/CUL Listed.
2. Provides warning of high oil level conditions with interface float.
3. Single phase, 120 volt, 60 hertz power required.
4. NEMA 4X fiberglass, corrosion resistant, weatherproof enclosure suitable for outdoor use and damp environments.
5. Audible Alarm Buzzer, 95dB pulsing horn with no timeout.
6. High Oil Light, indicates oil has accumulated below the oil interface float or the tank liquid level is below the High Oil Interface Float.
7. Power On light inside enclosure. Visible from the outside. Green light indicates the power is on.
8. Acknowledge button that silences the audible alarm when pressed, will test the system electronics when held
9. Locking clasp on door.
10. Alarm bell stays on until reset. Light stays on until reset, even if level goes down.
11. Unit comes supplied with extra dry contact for connection to a building alarm system.

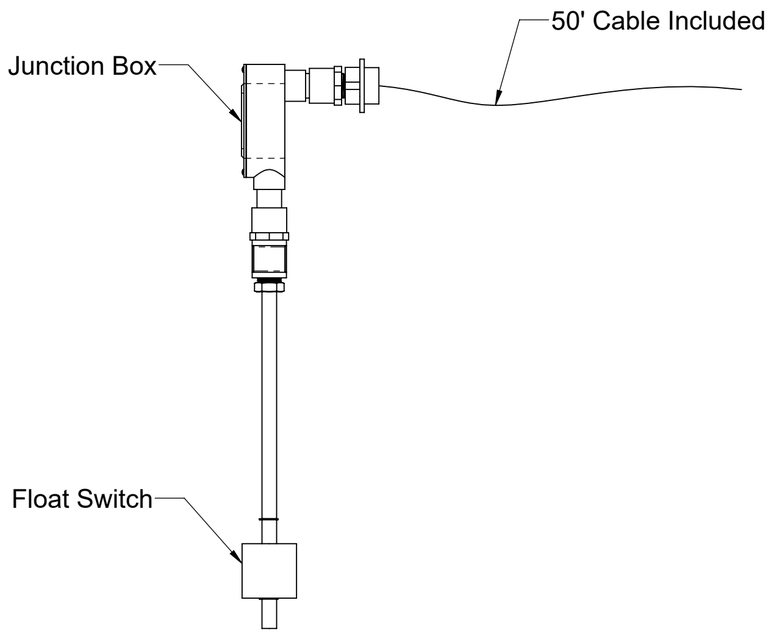

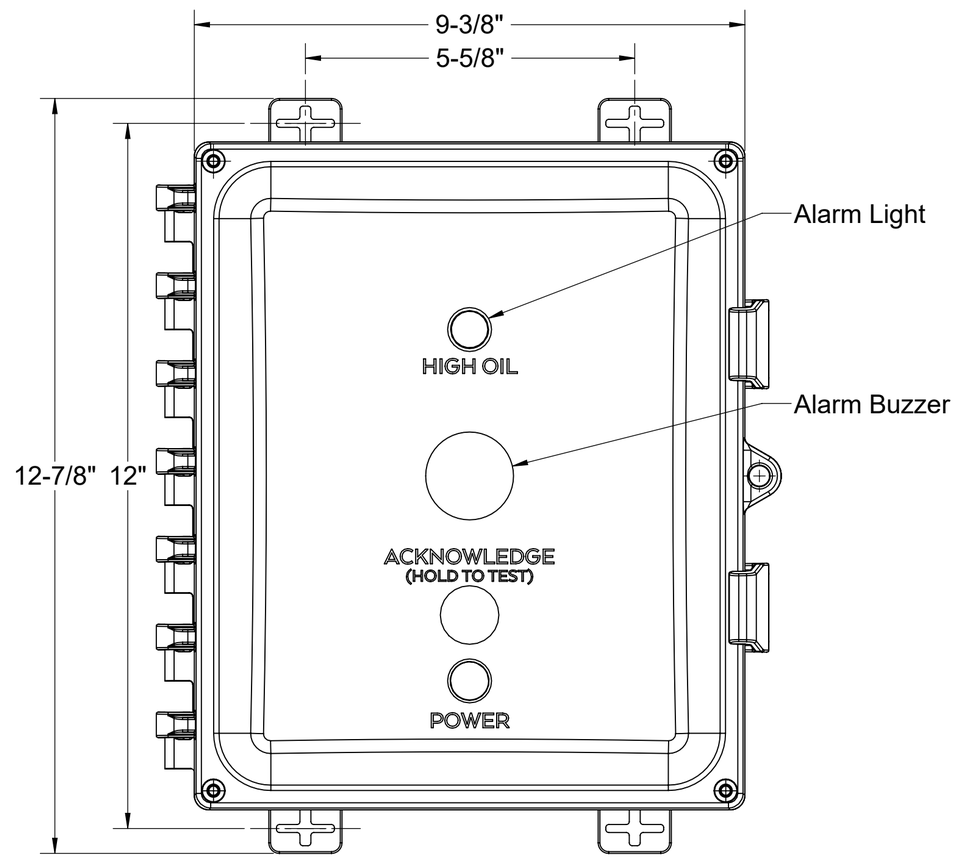

FRONT VIEW

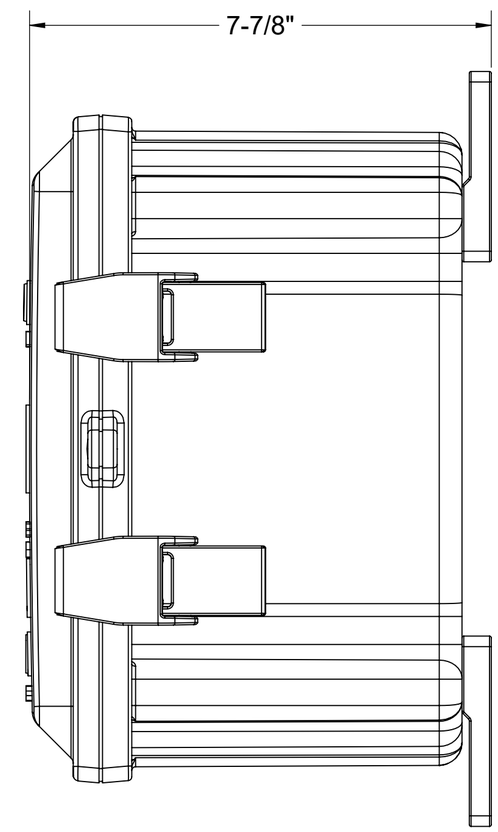

SIDE VIEW

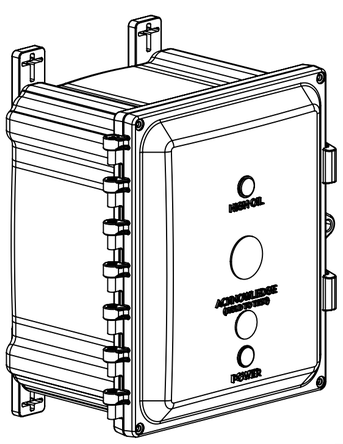

PO IS NON-CANCELABLE ORDER IS NON-RETURNABLE

PROPRIETARY AND CONFIDENTIAL
THE INFORMATION CONTAINED IN THIS DRAWING IS THE SOLE PROPERTY OF **STRIEM, LLC.**
ANY REPRODUCTION IN PART OR AS A WHOLE WITHOUT THE WRITTEN PERMISSION OF **STRIEM, LLC.** IS PROHIBITED.

MODEL NUMBER:	SS		
DESCRIPTION:	SLICK STICK™ OIL LEVEL MONITORING SYSTEM		
DWG BY: ENG	**DATE:** 3/3/2026	**REV:** 1	

SPECIFICATION SHEET

Striem
Kansas City, KS
Tel: 913-222-1500
orders@striemco.com
www.striemco.com

Made in the U.S.A

STRIEM