OS-350

High Efficiency Oil/Water Separator

Installation, Operation, & Maintenance Guide

913-222-1500 HELP@STRIEMCO.COM STRIEMCO.COM

CUSTOMER SERVICE HOURS: 8 AM - 5 PM CST

7/22/26

STRIEM

OS-350

High Efficiency Oil/Water Separator

Installation, Operation, & Maintenance Guide

OVERVIEW

Striem OS series model OS-350 is a 100 GPM polyethylene High Efficiency Oil/Water Separator intended for above- or below-grade installation. It is designed to separate oil and solids from wastewater.

OPERATION

Oily wastewater enters through the inlet connection. As the wastewater moves through the unit, solids and immiscible lighter-than-water contaminants are separated based on Stokes' Law. Immiscible, lighter-than-water droplets rise out of the wastewater stream, while sediment and sludge settle to the bottom.

LIFETIME WARRANTY

Our products are designed to last the lifetime of the plumbing system in which they are installed. If they don't, we will repair or replace them at no charge. Product damage due to normal wear and tear may be repaired or replaced at a reasonable charge. See website for full details. FAILURE TO INSTALL IN ACCORDANCE WITH THE INSTALLATION, OPERATION, AND MAINTENANCE GUIDE WILL VOID YOUR WARRANTY.

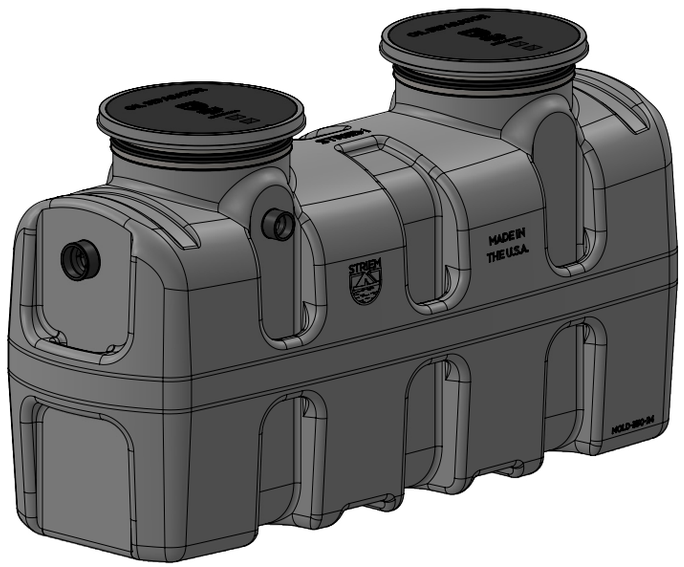

OS-350

OS SERIES
100 GPM
High Efficiency Oil/Water Separator

LIFETIME GUARANTEED

WARNING: FAILURE TO INSTALL IN ACCORDANCE WITH THE INSTALLATION, OPERATION, AND MAINTENANCE GUIDE WILL VOID YOUR WARRANTY.

MADE IN THE USA

WARNING AIR

DO NOT AIR PRESSURE TEST UNIT!
DOING SO MAY RESULT IN PROPERTY DAMAGE, SERIOUS BODILY INJURY, OR DEATH!
Refer to Installation Instructions for correct testing procedure.

LEAK/SEAL TESTING

Do not air test unit or Teleglide Riser system! Doing so may result in property damage, personal injury or death.

To perform a leak/seal test on the base unit, cap/plug all plumbing connections, remove the cover, and fill the unit with water just above the highest connection. Inspect unit and connections for leaks. Check water level at specific time intervals per local code.

WARNING: FAILURE TO INSTALL IN ACCORDANCE WITH THE INSTALLATION, OPERATION, AND MAINTENANCE GUIDE WILL VOID YOUR WARRANTY.

MAINTENANCE

1. Always take proper care to ensure a safe and healthy environment while maintaining the High Efficiency Oil/Water Separator. Avoid the presence of sparks or open flames while maintaining the unit.
2. Remove covers.
3. Contact a professional pumper contractor to remove all contents of the High Efficiency Oil/Water Separator, including oil, sediment, and wastewater.
4. Clean the drain lines and diffusers thoroughly of all debris.
5. Fill OS-350 with water to outlet invert.
6. Inspect cover gaskets for wear and tear and replace covers.
7. Dispose of contents per local code.

PUMPING FREQUENCY

OS-350 must be maintained prior to reaching maximum oil or sediment capacity for the unit to continue working efficiently.

Pumping frequency depends on the amount of oil and sediment in the wastewater. Monitor oil and sediment levels to determine site specific maintenance schedule requirements.

Oil levels can be tested with a core sampler. Striem recommends a minimum pumping frequency of 6 months.

TROUBLESHOOTING TIPS

Slower than usual drainage may indicate a blockage and a need to maintain the High Efficiency Oil/Water Separator. Ensure the drain lines and diffusers are cleared of all debris in the presence of slow drainage.

Effluent flow fouled with free oil may indicate the OS-350 has exceeded the maximum oil capacity. In the presence of oil in the effluent flow, maintain the unit immediately.

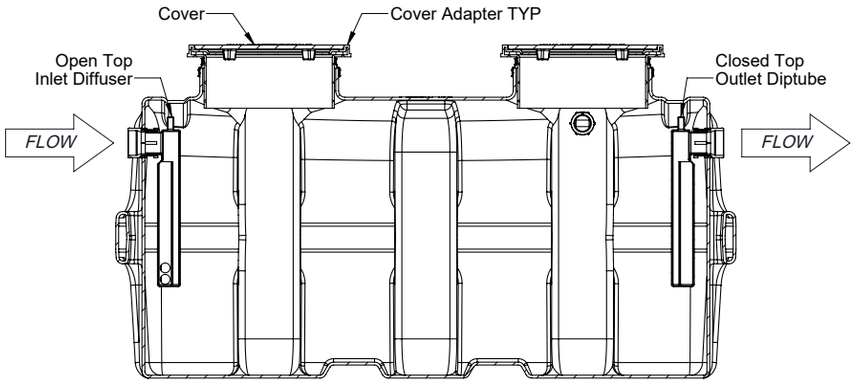

BELOW GRADE INSTALLATION INSTRUCTIONS

EXCAVATION

1. Surrounding soil must be undisturbed native soil or well compacted engineering fill.
2. Width and length of excavation shall be minimum 12″ greater than the tank on all sides.
3. Depth of excavation shall be 6″ deeper than tank bottom.
4. After the excavation is complete, create a well compacted support layer using approximately 3/4"clean, well-graded gravel, with no fines, so that the ground supporting the tank is a minimum 6" above native soil. (If using HDK with deadmen, minimum 12" above native soil).
5. Hold Down Kit is recommended for installations in high water table conditions to prevent float out. To be determined by specifying engineer. If necessary, order optional "High Water Table Hold Down Kit (HDK-11 or HDK-12 for use with concrete deadmen available)". *See details below.*

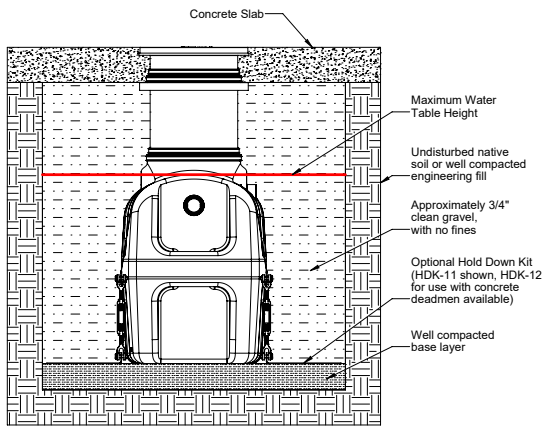

ABOVE GRADE INSTALLATION INSTRUCTIONS

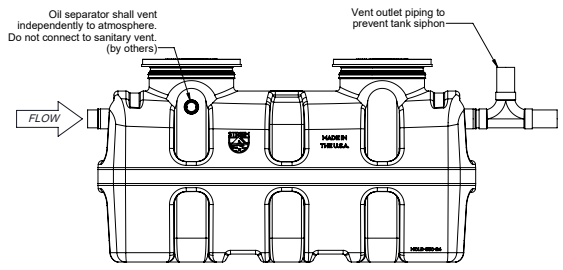

UNIT INSTALLATION

1. Connect waste piping to unit.
2. Fill OS-350 with water to outlet invert.
3. Ensure covers are properly installed.
4. Striem recommends our C24-M pedestrian cover for above-grade installations.

UNIT INSTALLATION

1. Lower and center the unit into the excavated hole. Do not use chains or accessways to move the unit.
2. The water table height must not exceed the height of the tank body. The tank and risers are not intended to withstand groundwater levels above the height of the tank body. Exposure to high groundwater levels may compromise the structural integrity of the tank and risers.
3. Ensure the unit covers are level with finished grade.
4. Fill OS-350 with water before backfilling to stabilize the unit and prevent float out during backfilling.
5. Maximum burial depth: 90" from standard cover height.

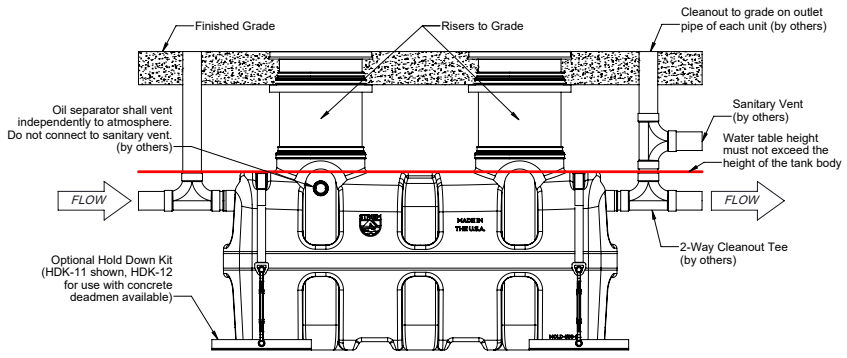

BACKFILLING & FINISHED CONCRETE SLAB

1. Preparation of sub grade per geotech recommendations.
2. Stabilize and compact sub grade to 95% proctor.
3. Before backfilling and pouring of slab, secure covers and risers (if used) to the unit.
4. Backfill using 3/4" clean gravel, with no fines (AASHTO M43 #57 Stone or similar).
   Native soil, sand, and CLSM (aka, slurry or flowable fill) are not acceptable backfill materials.
5. Thickness of concrete slab around the covers to be 8" for traffic loading. Thickness of concrete slab around the covers to be 4" for pedestrian or greenspace areas.
6. Concrete slab cannot interfere with the tank body below the risers.
7. Concrete to be 28 day compressive strength to 4000 PSI with 6 ± 1% air entrainment.
8. NO. 4 rebar (1/2") grade 60 steel per ASTM A615: connected with tie wire.
9. Rebar to be 2-1/2" from edge of concrete.
10. Rebar spacing 12" grid. 4" spacing around access openings.

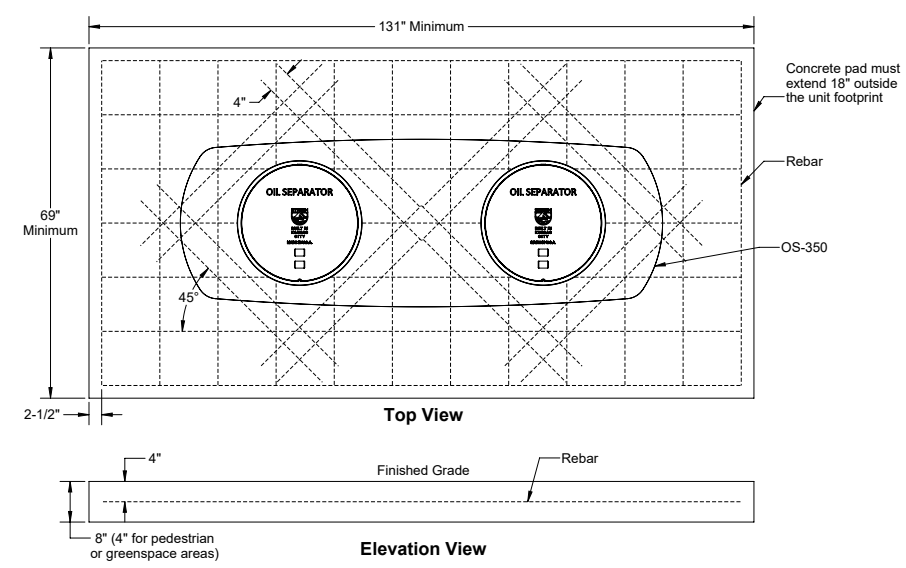

PLATE HOLD DOWN KIT INSTALLATION

HDK-11 (If necessary)

1. Place HDK Anchor Strap over the tank in the HDK strap channel.
2. Connect the Turnbuckle to the Anchor Strap.
3. Connect the Turnbuckle to the Anchor Plate. Repeat steps 1-3 for all four corners.
4. Hold down force achieved by backfill weight acting on Anchor Plate.
5. Anchor Plate may be bolted to concrete slab, if required, by using holes provided in Anchor Plate.

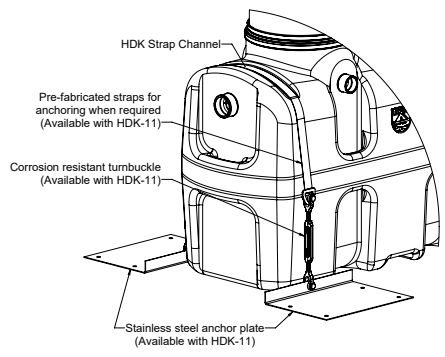

DEADMAN HOLD DOWN KIT INSTALLATION

HDK-12 (If necessary)

1. Deadmen should be constructed according to the American Concrete Institute (ACI) code.
2. Deadmen should be 12" wide x 12" tall x 95" long.
3. Each deadman should have (2) ancor points for connection to (2) 3,500 lbs. rated turnbuckles.
4. The top of deadmen shall be installed flush with tank bottom. The side of deadmen shall be installed tangent to tank side.
5. Pre-fabricated straps rated to 3,333 lbs each should be connected to a turnbuckle on each side. Turnbuckles should be secured to the deadmen anchor points on each side of the tank such that the tank is held down.

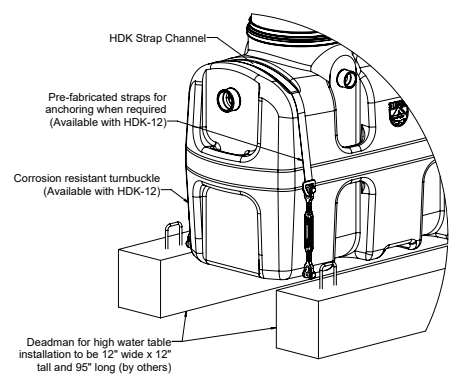

TELEGLIDE RISER | INSTALLATION INSTRUCTIONS

CORRUGATED PIPE RISER KIT (CPRK) AVAILABLE AS ALTERNATE RISER SOLUTION. SEE CPRK INSTALLATION INSTRUCTIONS FOR MORE DETAILS.

1
- Place OS-350 so that the pipe connections line up with jobsite piping.
- Measure dimension X to determine riser height needed.
- Select the required risers from the adjacent table. Riser chart shows quantity for each tank manway.

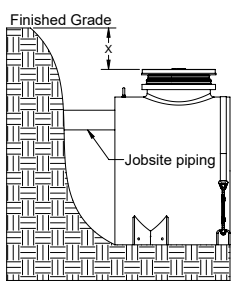

Cover Adapter		
X from Standard Cover Height	X from Cover with Monitoring	Risers Per Manway
Up to 5"	Up to 2"	Included
Up to 24"	Up to 21"	SR24
Up to 39"	Up to 36"	LR24
Up to 43"	Up to 40"	SR24 (x2)
Up to 58"	Up to 55"	SR24 + LR24
Up to 72"	Up to 69"	LR24 (x2)
Up to 90"	Up to 87"	SR24 (x2) + LR24 (x2)

2
- Loosen upper clamp with **nut driver bit (included with tank).**
- If no risers are needed, adjust cover adapter height as needed.
- Ensure 2-1/2" minimum engagement is maintained.
- If risers are needed, remove covers from cover adapters, and cover adapters from the unit.

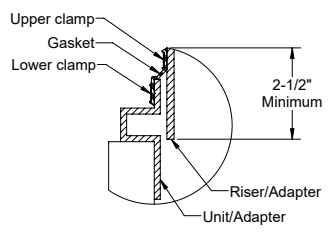

3
- Insert cover adapters into the required risers until they stop.
- Tighten upper clamp to keep risers from shifting. Risers are installed from short to long.
- If using a standard cover adapter, measure the riser height needed, X + 5.25" down the sidewall of the risers.
- If using a cover adapter with Slick Stick™, measure the riser height needed, X + 7.75" down the sidewall of the risers.
- Mark the location with **china marker (included with tank)**.
- Cover adapter may need to be adjusted outward for some dimension ranges. If mark is at the end of riser, no cutting is required.
- Corrugated Pipe Riser Kit (CPRK) available as alternate riser solution. See CPRK Installation Instructions for more details.

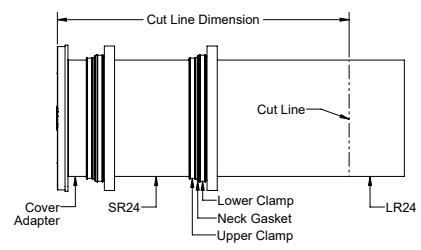

4
- Uninstall cover adapters and risers
- Extend mark made in **step 3** around the circumference of the riser.
- Cut along line with jigsaw, circular saw, or reciprocating saw.
- Make a mark around the circumference of the riser 3" from the cut end of riser.
- If no cuts were needed, make the mark 3" from the bottom of the bottom riser.

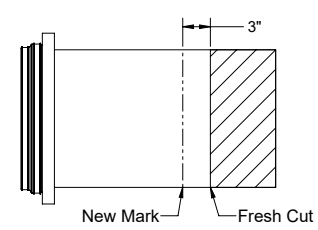

5
- Wipe clean all riser and cover adapter sidewalls.
- Insert the first riser into the tank neck until the mark made in **step 4** is in-line with the top of the neck gasket. This will ensure your risers reach the finished grade measured in **step 1**.

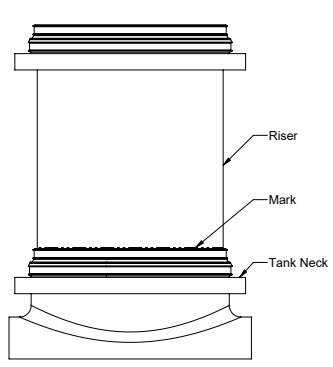

6
- Install risers and cover adapters into the tank neck starting from the marked riser, moving up to finished grade.
- Upper clamps may need to be loosened or removed to aid in assembly.

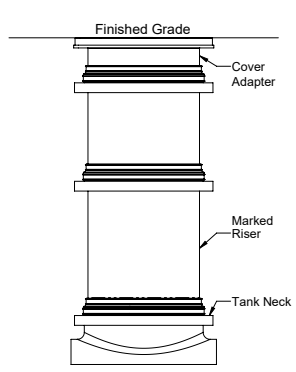

7
- Tighten all clamps. Striem recommends 57 in•lbs of torque.
- Reinstall covers on cover adapters.
- If tilting of the cover adapter is required to be flush with finished floor, it must be done after all clamps are tightened. A 6.5° tilt is the maximum.

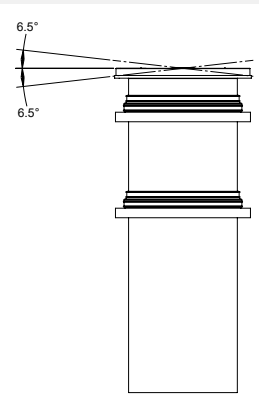
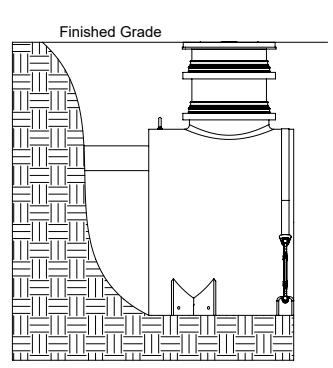
8
- If jobsite riser height conditions change after the previous steps have been completed, there is still room for vertical adjustment.
- As long as the minimum engagement of 2-1/2" on all joints are maintained, the adapters and risers may be adjusted/cut as many times as necessary.