SPK
SENSOR PLACEMENT KIT
Installation, Operation, & Maintenance Guide

913-222-1500 HELP@STRIEMCO.COM STRIEMCO.COM

CUSTOMER SERVICE HOURS: 8 AM - 5 PM CST

10/14/26

STRIEM

SPK
SENSOR PLACEMENT KIT
Installation, Operation, & Maintenance Guide

OVERVIEW
Striem Sensor Placement Kit is a polyethylene pH monitoring system intended for above- or below-grade installation. It is designed to monitor the pH of the effluent wastewater when used in conjunction with Striem's Scout™.

OPERATION
Neutalized wastewater enters through the inlet connection. As the neutralized wastewater flows into the unit, a sump is created. This sump is continuously monitored by the pH sensor when connected to Striem's Scout.

LIFETIME WARRANTY
Our products are designed to last the lifetime of the plumbing system in which they are installed. If they don't, we will repair or replace them at no charge. Product damage due to normal wear and tear may be repaired or replaced at a reasonable charge. See website for full details. FAILURE TO INSTALL IN ACCORDANCE WITH THE INSTALLATION, OPERATION, AND MAINTENANCE GUIDE WILL VOID YOUR WARRANTY.

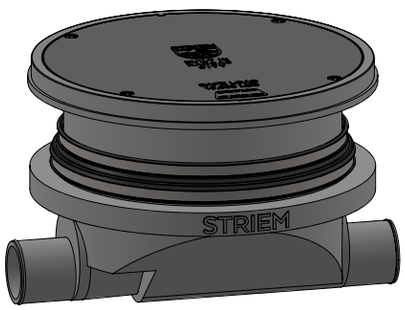

4" CONNECTIONS

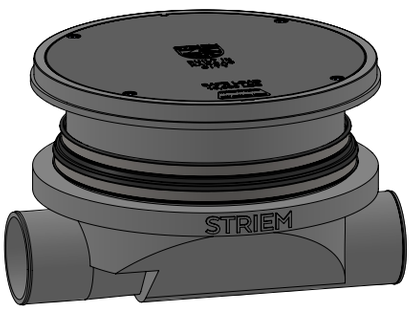

6" CONNECTIONS

SPK
SENSOR PLACEMENT KIT
pH MONITORING SYSTEM

LIFETIME GUARANTEED

WARNING: FAILURE TO INSTALL IN ACCORDANCE WITH THE INSTALLATION, OPERATION, AND MAINTENANCE GUIDE WILL VOID YOUR WARRANTY.

MADE IN THE USA

WARNING

DO NOT AIR PRESSURE TEST UNIT!
DOING SO MAY RESULT IN PROPERTY DAMAGE, SERIOUS BODILY INJURY, OR DEATH
Refer to Installation Instructions for correct testing procedure.

LEAK/SEAL TESTING

DO NOT AIR PRESSURE TEST UNIT OR TELEGLIDE RISER SYSTEM!
Doing so may result in property damage, personal injury or death.

To perform a leak/seal test on the base unit, cap/plug all plumbing connections, remove the cover, and fill the unit with water just above the highest connection. Inspect unit and connections for leaks. Check water level at specific time intervals per local code.

WARNING: FAILURE TO INSTALL IN ACCORDANCE WITH THE INSTALLATION, OPERATION, AND MAINTENANCE GUIDE WILL VOID YOUR WARRANTY.

MAINTENANCE

1. Always take proper care to ensure a safe and healthy environment while maintaining the unit.
2. Remove unit cover.
3. Remove probe assembly via accessible handle below the cover. Probe assembly may be detached from handle assembly via the stainless steel locking pin.
4. Inspect and clean probe (refer to Scout Installation, Operation, & Maintenance Guide).
5. Reassemble probe and handle assemblies and reinsert into tank sump, making sure it is fully seated.
6. Inspect unit's cover gasket for wear and tear and replace unit cover.

TROUBLESHOOTING TIPS
Slower than usual drainage may indicate a blockage and a need to maintain the unit and/or downstream units.

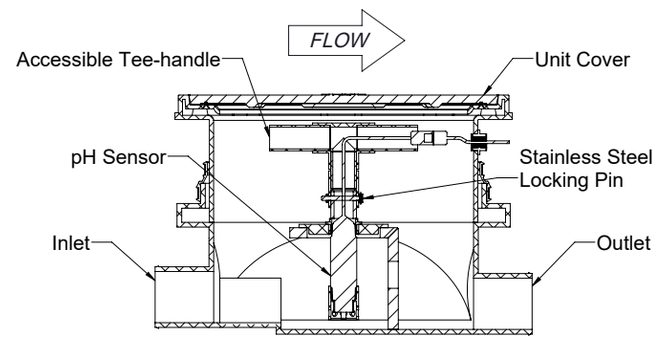

ABOVE GRADE | INSTALLATION INSTRUCTIONS

1. Support SPK with a structure that can support a minimum of 100 lbs.
2. Connect waste piping to unit via mechanical couplers.
3. Install tee-handle and pH sensor per their installation sections.
4. Ensure cover is properly installed on unit.
5. Striem recommends our C24-M pedestrian cover for above-grade installations.

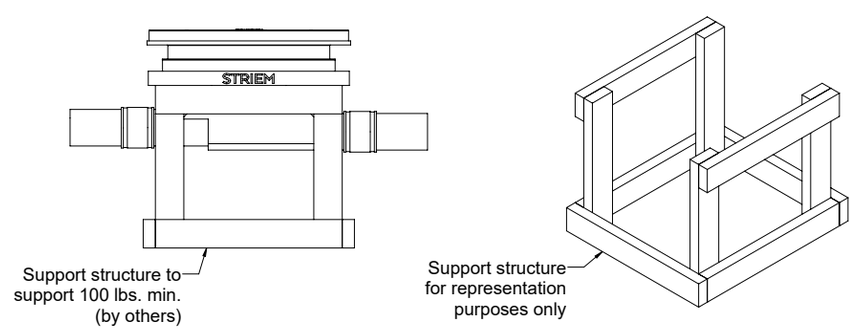

TEE-HANDLE | INSTALLATION INSTRUCTIONS

1. Determine distance between desired handle placement at grade and PVC coupler.
2. Cut 1-1/2" PVC pipe to extend handle (extension pipe of suitable length for above-grade installations provided).
3. Glue both ends of the extension pipe to the female socket connection of the coupler and tee-handle for final installation.
4. Cover and tee-handle can be easily removed and replaced to assist in maintenance.

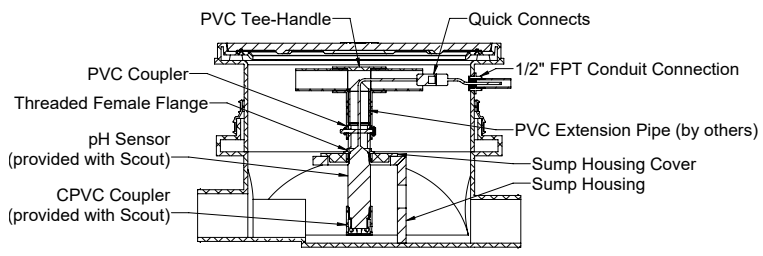

PROBE | INSTALLATION INSTRUCTIONS

1. Run the cable of the pH sensor (provided with Scout) up through the threaded female flange, PVC coupler, and PVC extension pipe, routing it out an open side of the teehandle.
2. Thread on the cable side of the pH sensor to the bottom of the threaded female flange.
3. Run the raw cabling of the Scout through the conduit connection in the tank, from the inside to the outside, leaving the quick connect end on the inside of the tank.
4. Connect the pH sensor's quick connect to the Scout's quick connect.
5. Ensure that the CPVC coupler provided with the Scout is threaded onto the bottom of the pH sensor and remove the rubber protective cap to expose the glass probes.
6. Prefill sump housing with water.
7. Insert the pH sensor into the sump housing, ensuring that the cover is fully seated on the sump housing. Failure to do so can result in permanent damage from the sensor being left out of water for an extended period of time.
8. Ensure cover is properly installed on unit.

BELOW GRADE | INSTALLATION INSTRUCTIONS

EXCAVATION

1. Surrounding soil must be undisturbed native soil or well compacted engineering fill.
2. Width and length of excavation shall be minimum 12" greater than the tank on all sides.
3. Depth of excavation shall be 6" deeper than tank bottom.

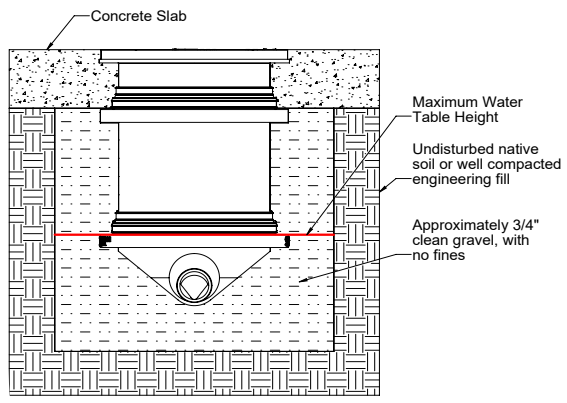

UNIT INSTALLATION

1. Lower and center the unit into the excavated hole. Do not use chains or accessways to move the unit.
2. Maximum burial depth: 103" from standard cover height.
3. The water table height must not exceed the height of the tank body. The tank and risers are not intended to withstand groundwater levels above the height of the tank body. Exposure to high groundwater levels may compromise the structural integrity of the tank and risers.
4. Ensure the unit cover is level with finished grade.

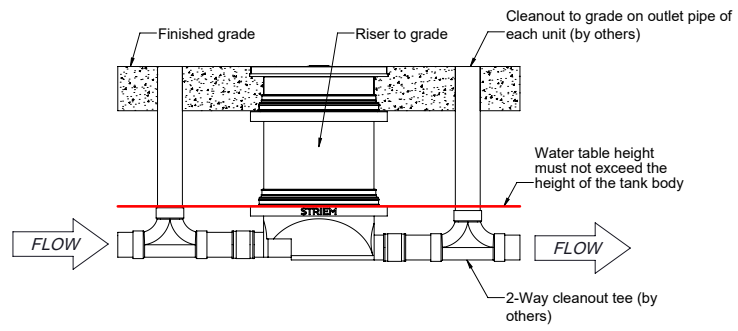

BACKFILLING & FINISHED CONCRETE SLAB

1. Preparation of sub grade per geotech recommendations.
2. Stabilize and compact sub grade to 95% proctor.
3. Before backfilling and pouring of slab, secure covers and riser (if used) to the unit.
4. Backfill using 3/4" clean gravel, with no fines (AASHTO M43 #57 Stone or similar). **Native soil, sand, and CLSM (aka, slurry or flowable fill) are not acceptable backfill materials.**
5. Thickness of concrete slab around the covers to be 8" for traffic loading. Thickness of concrete slab around the covers to be 4" for pedestrian or greenspace areas.
6. Concrete slab cannot interfere with the tank body below the risers.
7. Concrete to be 28 day compressive strength to 4000 PSI with 6 ± 1% air entrainment.
8. NO. 4 rebar (1/2") grade 60 steel per ASTM A615: connected with tie wire.
9. Rebar to be 2-1/2" from edge of concrete.
10. Rebar spacing 12" grid. 4" spacing around access openings.

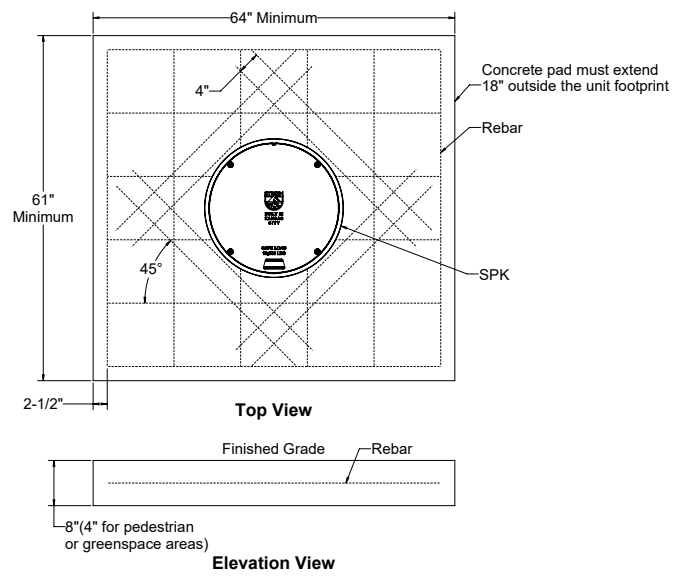

TELEGLIDE RISER | INSTALLATION INSTRUCTIONS

1
- Place SPK so that the pipe connections line up with jobsite piping.
- Measure dimension X to determine riser height needed.
- Select the required riser from the adjacent table. Riser chart shows quantity for each tank manway.

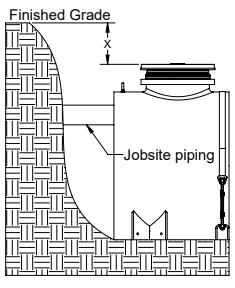

Standard Cover Adapter	
Riser Height Needed	**Risers Required Per Manway**
0" - 2"	None
2" - 21"	SR24 (1)
21" - 36"	LR24 (1)
36" - 40"	SR24 (2)
40" - 55"	SR24 (1), LR24 (1)
55" - 69"	LR24 (2)
69" - 87"	SR24 (1), LR24 (2)
87" - 103"	LR24 (3)

2
- Loosen upper clamp with **nut driver bit (included with tank).**
- If no risers are needed, adjust cover adapter height as needed.
- Ensure 2-1/2" minimum engagement is maintained.
- If risers are needed, remove cover from cover adapter, and cover adapter from the unit.

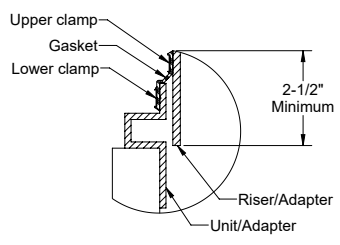

3
- Insert cover adapter into the riser, if required, until it stops.
- Tighten upper clamp to keep risers from shifting.
- If using a standard cover adapter, measure the riser height needed, X + 7.75" down the sidewall of the risers.
- Mark the location with **china marker (included with tank)**.
- Cover adapter may need to be adjusted outward for some dimension ranges. If mark is at the end of riser, no cutting is required.

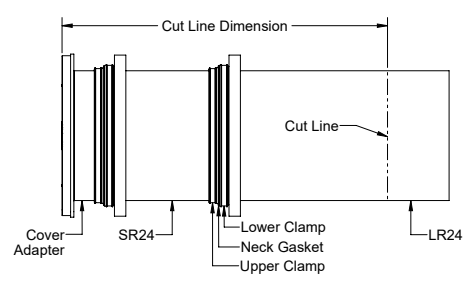

4
- Uninstall cover adapter and riser
- Extend mark made in **step 3** around the circumference of the riser.
- Cut along line with jigsaw, circular saw, or reciprocating saw.
- Make a mark around the circumference of the riser 3" from the cut end of riser.
- If no cuts were needed, make the mark 3" from the bottom of the riser.

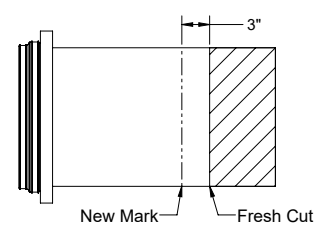

5
- Wipe clean all riser and cover adapter sidewalls.
- Insert the first riser into the tank neck until the mark made in **step 4** is in-line with the top of the neck gasket. This will ensure your risers reach the finished grade measured in **step 1**.

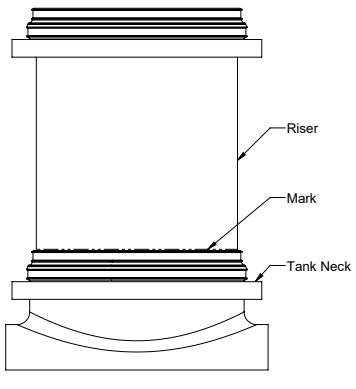

6
- Install risers and cover adapter into the tank neck starting from the marked riser, moving up to finished grade.
- Upper clamps may need to be loosened or removed to aid in assembly.

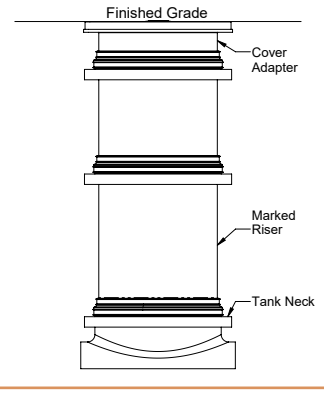

7
- Tighten all clamps. Striem recommends 57 in•lbs of torque.
- Reinstall covers on cover adapters.
- If tilting of the cover adapter is required to be flush with finished floor, it must be done after all clamps are tightened. A 6.5° tilt is the maximum.

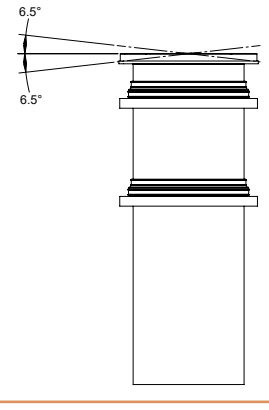
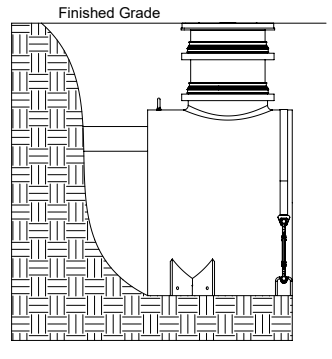
8
- If jobsite riser height conditions change after the previous steps have been completed, there is still room for vertical adjustment.
- As long as the minimum engagement of 2-1/2" on all joints are maintained, the adapter and riser may be adjusted/cut as many times as necessary.